ORDER NO. AVS0102336C8

Service Manual

Digital Disk Recorder

WJ-HD100

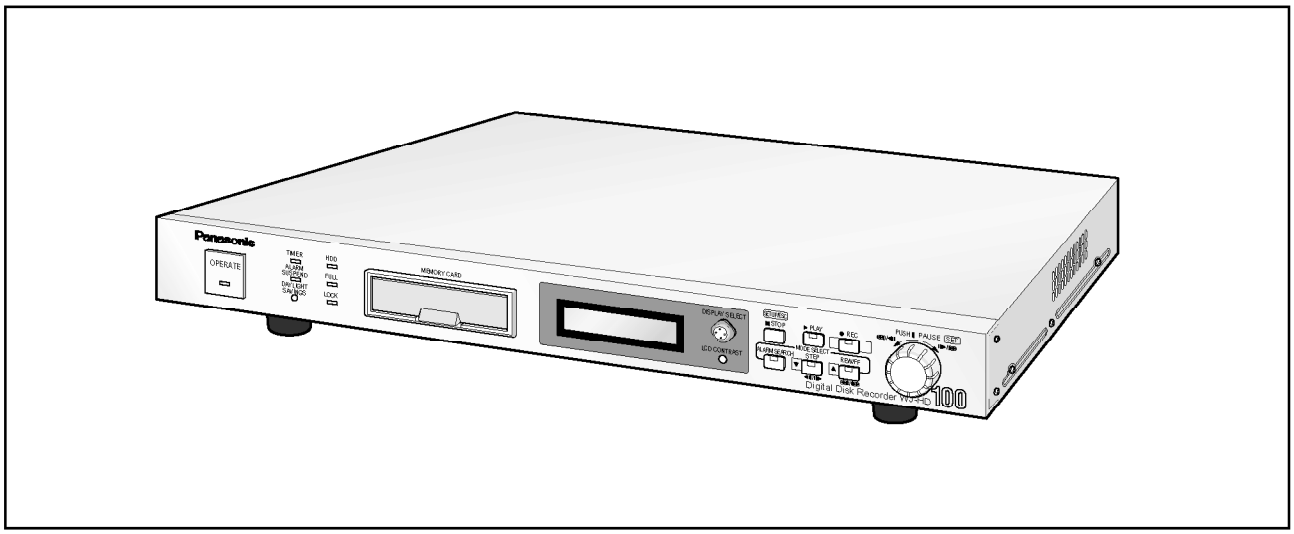

SPECIFICATIONS

General

Required Power :	220 - 240 V AC 50 Hz
Power Consumption:	22 W
Operating Temperature :	+5°C to +45°C (41°F to 113°F)
Dimensions :	420 mm (W) x 44 mm (H) x 350 mm (D), excluding rubber feet [16-9/16" x 1-3/4" x 13-13/16"]
Weight :	5.2 kg (2.4 lbs)

Input

Video Input :	Composite video or data multiplexed, 1 V[p-p], 75 Ω auto-termination, BNC
Audio Input :	–10 dBV, 10 kΩ, unbalanced, RCA pinjack
Alarm Input :	Non-voltage make contact, 100 ms or longer, terminal
Alarm Reset Input :	Non-voltage make contact, 100 ms or longer, terminal
Time Adjust Input :	Non-voltage make contact, 100 ms or longer, terminal
Series Recording Input :	Non-voltage make contact, 100 ms or longer, terminal
Alarm Recall Input :	Non-voltage make contact, 100 ms or longer, terminal
Remote Control Input :	REC, PLAY, STOP (SETUP), REW/FF, STEP, ALARM SEARCH, JOG-RIGHT, JOG-LEFT, JOG-CLICK (EXT REC): Non-voltage make contact, 100 ms or longer, terminal

Output

Monitor Output :	Composite video, 1 V[p-p], 75 Ω, BNC
Video Output :	Looped through, BNC
Audio Output :	–10 dBV, 600 Ω, unbalanced, RCA pinjack
Camera Switching Output :	Open-collector, MAX 12 V DC 100 mA, RCA pinjack
Alarm Output :	Low-active (open-collector, MAX DC 24 V 100 mA)/High-active (12 V DC, 220 Ω) switchable, terminal
Alarm Recover Output :	Low-active (open-collector, MAX 24 V DC 100 mA)/High-active (5 V DC, 220 Ω) switchable, terminal
Recording Status Output :	Open-collector, MAX 24 V DC 100 mA, terminal
Playback Status Output :	Open-collector, MAX 24 V DC 100 mA, terminal
Time Adjust Output :	Open-collector, MAX 24 V DC 100 mA, terminal
Disk End Status Output :	Open-collector, MAX 24 V DC 100 mA, terminal
Auto OFF Output :	Open-collector, MAX 24 V DC 100 mA, terminal
Series Recording Output :	Open-collector, MAX 24 V DC 100 mA, terminal

Panasonic

©2001 Matsushita Communication Industrial Co., Ltd. All rights reserved. Unauthorized copying and distribution is a violation of law.

⚠ WARNING

This service information is designed for experienced repair technicians only and is not designed for use by the general public.
It does not contain warnings or cautions to advise non-technical individuals of potential dangers in attempting to service a product.
Products powered by electricity should be serviced or repaired only by experienced professional technicians. Any attempt to service or repair the product or products dealt with in this service information by anyone else could result in serious injury or death.

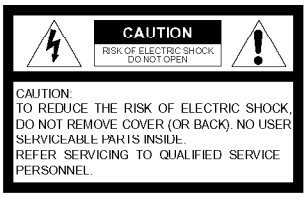

This symbol warns the user that uninsulated voltage within the unit may have sufficient magnitude to cause electric shock. Therefore, it is dangerous to make any kind of contact with any inside part of this unit.

This symbol alerts the user that important literature concerning the operation and maintenance of this has been included. Therefore, it should be read carefully in order to avoid any problems.

IMPORTANT SAFETY NOTICE

There are special components used in this equipment which are important for safety. These parts are indicated by the "⚠" mark on the schematic diagram and the replacement parts list. It is essential that these critical parts should be replaced with manufacturer's specified parts to prevent X-radiation, shock, fire, or other hazards. Do not modify the original design without permission of manufacture.

Warning
The lithium battery in this equipment must only be replaced by qualified personnel. When necessary, contact your local Panasonic supplier.

CAUTION
Danger of explosion if battery is incorrectly replaced.
Replace only with the same or equivalent type recommended by the equipment manufacturer. Discard used batteries according to manufacturer's instructions.

Serial Interface

RS-232C :	9-pin D-Sub
RS-485 :	PS•Data protocol, Modular-6

Alarm Function

Alarm Buzzer :	ON/OFF
Alarm Reset :	Auto reset/manual reset
Alarm Suspension :	ON/OFF
Button Lock Buzzer :	ON/OFF

Dimensions and weight are approximate.
Specifications are subject to change without notice.

STANDARD ACCESSORIES

Rack Mounting Bracket.....2 pcs.
Fixing Screw (M3x10) .....6 pcs.

TRADEMARKS

SanDisk™ and CompactFlash™ are trademarks of SanDisk Corporation.

CONTENTS

Major Operating Controls and Their Functions 1
Adjustment Procedure 4
Location of Test Points and Adjusting Controls 4
Wiring Diagram 5
Schematic Diagram
Main Board (1/3) 6
Main Board (2/3) 7
Main Board (3/3) 9
CF Memory Board 10
Power Board 12
Front-R Board 13
Front-L Board 14
LCD Board 14
Conductor View
Main Board 8
CF Memory Board 10
Power Board 11
Front-R Board 13
Front-L Board 14
LCD Board 14
Block Diagram
Main Board (1/2) 15
Main Board (2/2)/CF Memory Board/Front-L Board/Front-R Board/LCD Board 16
Exploded View 17
Replacement Parts List 18

MAJOR OPERATING CONTROLS AND THEIR FUNCTIONS

■ Front View

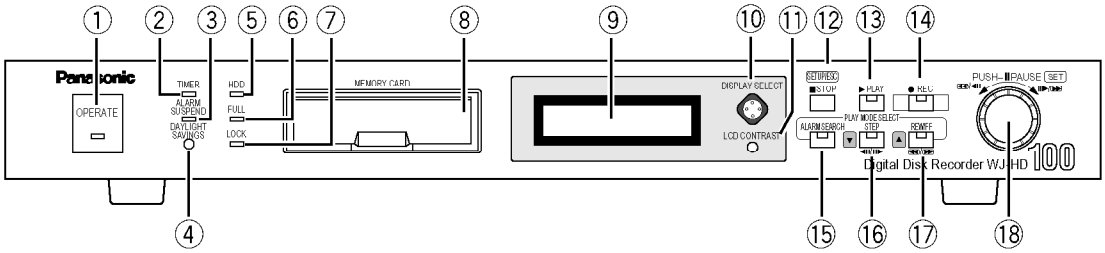

① **Operate Indicator [OPERATE]**
Lights while the power switch on the rear is turned on.

② **Timer Record Reservation Indicator [TIMER]**
Lights when a reservation is made for internal timer recording.

③ **Alarm Suspension Indicator [ALARM SUSPEND]**
Lights when an alarm is activated while alarm suspension is selected. The alarm will be logged in the event history, but recording is suspended and the buzzer will not sound.

④ **Summer Time Button [SUMMER TIME]**
Press the recessed button with a pin to advance the internal clock by one hour to summer time, or to set it back to normal time. While the clock is on summer time, an asterisk * appears in the time and date display on the LCD and on the video monitor.

⑤ **HDD Access Indicator [HDD]**
Lights while the disk is being accessed.

⑥ **Full Indicator [FULL]**
Blinks when the remaining disk capacity reaches the preset value, and lights when the disk is full.

⑦ **Lock Indicator [LOCK]**
Lights when buttons and JogDial on the front panel are disabled.

⑧ **Memory Card Slot [MEMORY CARD]**
Open the lid to insert the CompactFlash card into the slot or to remove it from the slot. The card is used to store still pictures for browsing through them on a personal computer.

⑨ **LCD**
Displays setup parameters while working with menus, or the operating status while recording or playing back.

⑩ **LCD Button [DISPLAY SELECT]**
There are five positions to press; up, down, left, right and centre. Press the appropriate positions to select a parameter on the LCD.

⑪ **LCD Contrast Control [LCD CONTRAST]**
Adjust the LCD contrast by rotating the control knob with a small screw driver.

⑫ **Stop and Setup/ Escape Button [■ STOP] [SETUP/ESC]**
Pressing this button in any mode other than menu setup stops recording or playback.
Holding down this button for 2 seconds calls up setup menus or escapes from the setup.
Press this button to go back one step to the previous selection in the setup menu.

⑬ **Play Button [▶ PLAY]**
Press this button to start playback. The LED lights while playing back, and blinks while pausing or searching.

⑭ **Recording Button [● REC]**
Press this button to start recording. The LED lights while recording, and blinks while alarm recording.

⑮ **Alarm Search Button [ALARM SEARCH]**
Press this button to search for a desired record in the alarm log. The LED lights in the alarm search mode.

⑯ **Step and Down Button [STEP ◀II/II▶] [▼]**
Press this button to start playing back still pictures field by field. The LED lights in the step playback mode.
Press this button to move the cursor downward in a setup menu on the monitor.

⑮ to ⑰ are PLAY MODE SELECT buttons that also specify the JogDial performance in the selected play mode.

⑰ **REW/FF and Up Button [REW/FF ◄◄/►►] [▲]**
Press this button to rewind or fast-forward the recorded field. The LED lights in the REW/FF mode.
Press this button to move the cursor upward in a setup menu on the monitor.

⑱ **JogDial [PUSH – II PAUSE] [SET]**
Press the JogDial to pause or restart playback.
Rotate the JogDial to access the desired field while rewinding, fast-forward and playing back.
Rotate the JogDial to search the oldest picture recorded on the disk for playing back in chronological order.
Rotate the JogDial to select a parameter in a setup menu.
Press the JogDial to enter the selected parameter and move the cursor to the next position on a setup menu.
Hold down the JogDial to copy still pictures to the CompactFlash card.

■ Rear View

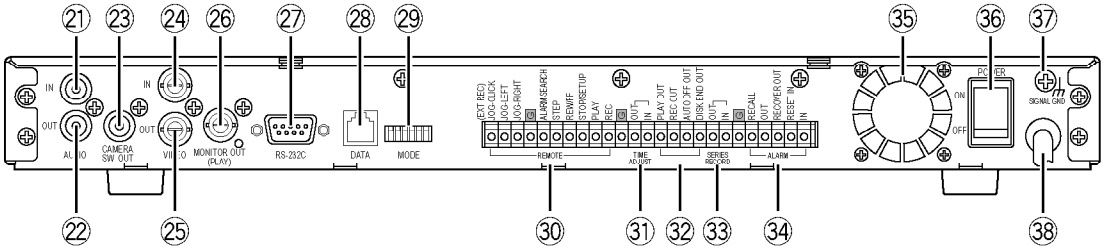

㉑ **Audio Input Connector [AUDIO IN]**
RCA standard jack accepts an unbalanced –10 dB and 10 kΩ line input audio signal supplied from an external device.

㉒ **Audio Output Connector [AUDIO OUT]**
RCA standard jack supplies an unbalanced –10 dB and 600 Ω line output audio signal to an external device.

㉓ **Camera Switching Output Connector [CAMERA SW OUT]**
This jack is for connecting an external device such as a video multiplexer receiving multiple camera inputs. The switching signal supplied makes the connected device switch from one camera to the other. Use this terminal only when the recording field rate is lower than 10 fps.

㉔ **Video Input Connector [VIDEO IN]**
This BNC accepts a video signal supplied from a camera or video multiplexer. A 75 Ω termination is made unless the video output terminal is connected.

㉕ **Video Output Connector [VIDEO OUT]**
This BNC supplies a video signal looped through the video input terminal. Connect with a video monitor to check the input picture, or the next WJ-HD100 in a SERIES connection.

㉖ **Monitor Output Connector [MONITOR OUT (PLAY)]**
This BNC supplies playback pictures stored on the hard disk, or setup windows. Connect with a video monitor.

㉗ **RS-232C Port [RS-232C]**
Through this 9-pin D-Sub connector the digital disk recorder communicates with the personal computer. Use a reverse type cable for connection with the personal computer. Protocol and commands are described in APPENDIX.

㉘ **Data Port [DATA]**
Connect with equipment in the PS·Data chain or a system controller.

㉙ **Mode Switch [MODE]**
Use this switch for setting unit addresses and initializing all disk contents and setup data.

Terminal Board

㉚ **Remote In Terminal**
These are connected with switches for external control of major operations on the front panel such as JOG-CLICK, JOG-LEFT, JOG-RIGHT, ALARM SEARCH, STEP, REW/FF, STOP/SETUP, PLAY and REC.

㉛ **Time Adjust Terminal**
IN and OUT terminals for synchronizing the internal clock with connected external devices

㉜ **Status Out Terminal**

These terminals supply the following status information: PLAY OUT, REC OUT, AUTO OFF OUT, DISK END OUT.

AUTO OFF OUT: AUTO OFF OUT signal turns active (active when low), and playback or recording stops when a temperature error is detected inside the unit. Turn the power off and wait for a while until you turn it on again to reset the error.

㉝ **Series Record Terminal**

Connect these terminals when using multiple units in series or loop connection.

㉞ **Alarm Terminal**

These terminals supply and receive the following alarm related information: ALARM RECALL, ALARM OUT, ALARM RECOVER OUT, ALARM RESET IN, ALARM IN.

㉟ **Cooling Fan**

Do not block the air flow of this cooling fan through the openings on both sides of the top cover to prevent the appliance from overheating.

㊱ **Power Switch [POWER ON OFF]**

Turns the power on and off. The OPERATE indicator on the front panel lights while the power switch is turned on.

㊲ **Signal Ground [SIGNAL GND]**

Connect with the terminals of other devices as necessary to avoid grounding loop and noise.

㊳ **Power Cord**

ADJUSTMENT PROCEDURE

1. Test Equipments Required

- The following Test Equipments are required for adjustment of the Digital Disk Recorder WJ-HD100.
- Underscanned Colour Video Monitor
- Waveform Monitor
- Video Signal Generator (Colour Bar Signal)
- Oscilloscope
- Ceramic Screwdriver

2. Disassembling Procedure for Adjustment

- Referring to Fig. 2-1, remove nine screws that secure the Upper Cover and remove the Upper Cover.

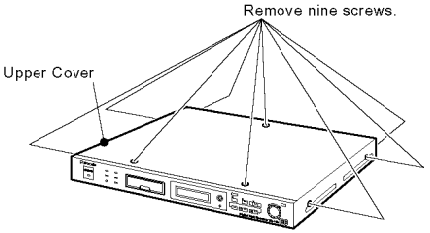

Fig. 2-1

3. Connection for Adjustment

- Fig. 3-1 shows the connecting diagram for adjustment of the WJ-HD100.

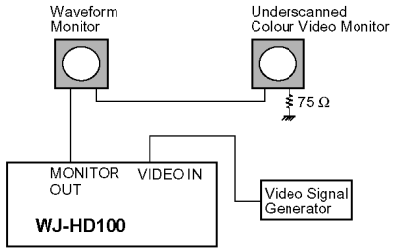

Fig 3-1

- Connect the Underscanned Colour Video Monitor through the Waveform Monitor to the Monitor Output Connector on the Rear Panel of the WJ-HD100.
- Terminate the input terminal of the Underscanned Colour Viceo Monitor with 75 Ω.
- Connect the Video Signal Generator to the Video Input Connector on the Rear Panel of the WJ-HD100.
- Connect the probe of the Oscilloscope at the desired Test Point in each adjustment step.

4. Adjustment Procedure

- Refer to the Location of the Test Points and Adjusting Controls on the right side of page 4.

(1). Output Gain Adjustment

Test Point: Monitor Output Connector Rear Panel
Adjust: VR201 (Y LEVEL) Main Board

- Supply the Colour Bar signal to the Video Input Connector on the Rear Panel.
- Connect the terminated Oscilloscope with 75Ω to the Monitor Output Connector on the Rear Panel.
- Press the Recording Button (● **REC**) to start recording.
- Press the Stop Button (■ **STOP**) after a while to stop recording.
- Press the Play Button (▶ **PLAY**) to start playing back.
- Adjust VR201 so that the Luminance Level becomes 700 ± 70 mV as shown in Fig. 4-1.

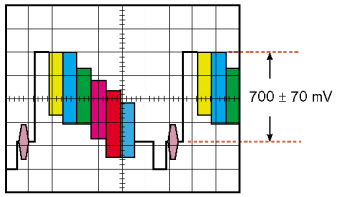

Fig. 4-1

- Press the Stop Button (■ **STOP**) to stop playing back.

LOCATION OF TEST POINTS AND ADJUSTING CONTROLS

MAIN BOARD (COMPONENT SIDE)

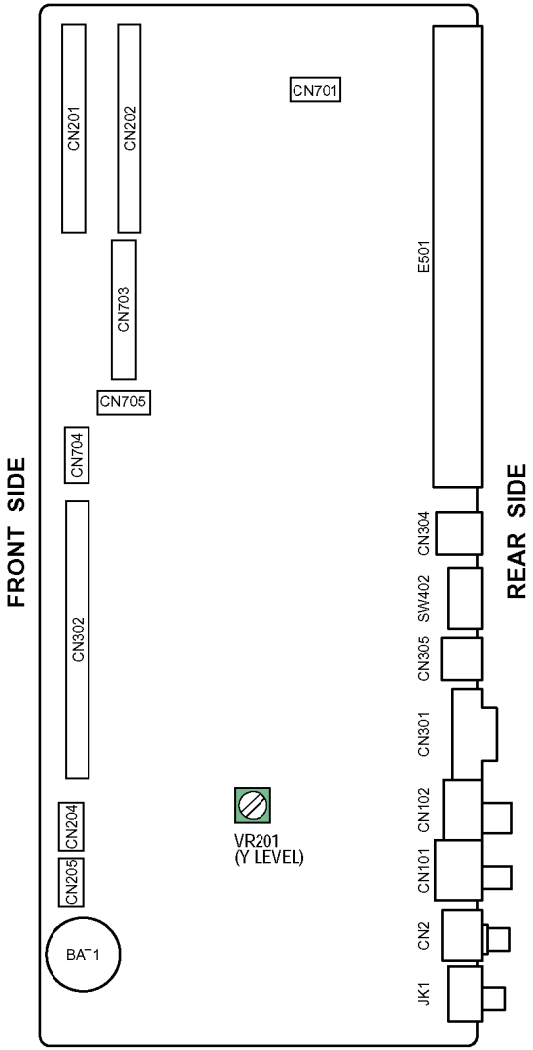

WIRING DIAGRAM

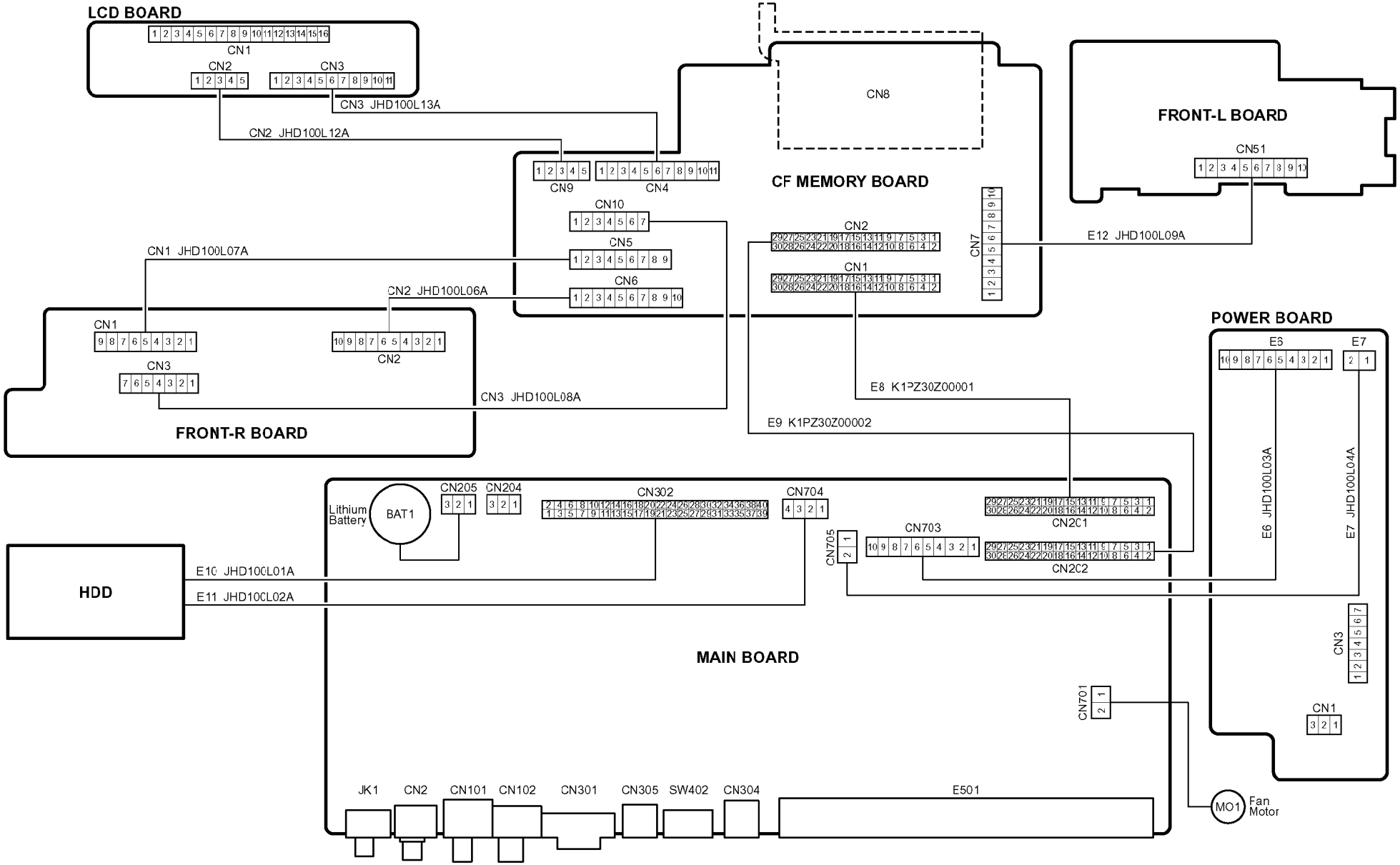

SCHEMATIC DIAGRAM OF MAIN BOARD (1/3)

MAIN BOARD (1/3)

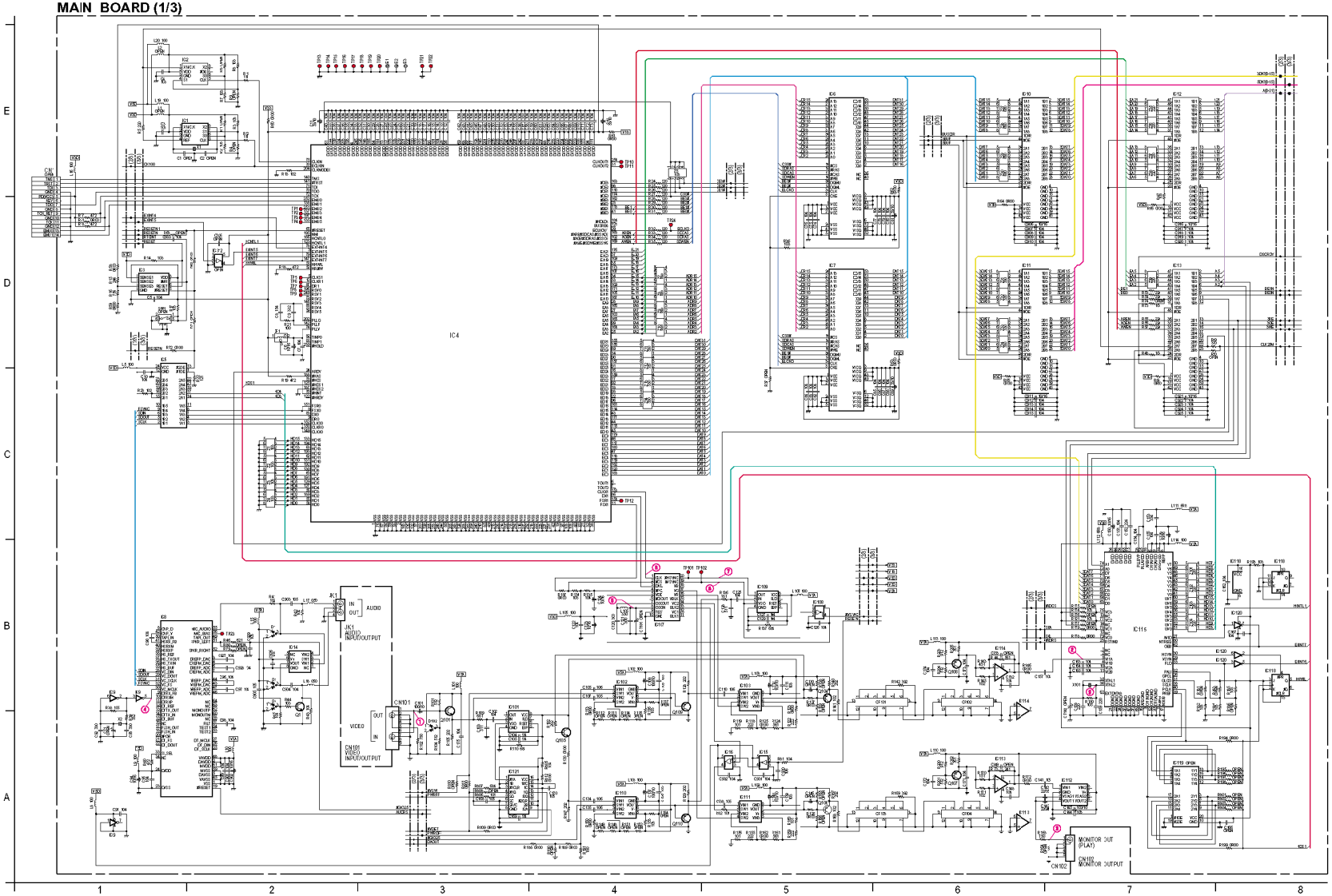

< INDEX > MAIN BOARD (1/3)

IC1	E2
IC2	E2
IC3	D1
IC4	D3
IC5	C1
IC6	E5
IC7	D5
IC8	B1
IC9	A1,B1
IC10	E6
IC11	D6
IC12	E7
IC13	D7
IC14	B2
IC15	A5
IC16	A5
IC18	A3
IC102	B4
IC103	B5
IC107	B4
IC108	B5
IC109	B5
IC110	A4
IC111	A5
IC112	A7
IC113	A6
IC114	B6
IC115	B7
IC116	B8
IC120	B8
IC121	A3
Q1	B2
Q101	B3
Q104	B5
Q105	A4
Q106	A5
Q107	A6
Q108	B6
Q109	B4
Q110	A4
D1	B2
D2	B2
D3	B2
D102	A3

Note: The value indicated in the schematic diagram should be read as follows:

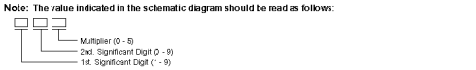

<Example>

For Resistor:
330 → 33×10^{0} = 33 Ω
561 → 56×10^{1} = 560 Ω
123 → 12×10^{3} = 12k Ω
0R00 = 0 Ω

For Capacitor
(Except Electrolytic Capacitor and Tantalum Capacitor):
820 → 82×10^{0} = 82 pF
102 → 10×10^{2} = 1000 pF = 0.001 μF
104 → 10×10^{4} = 100000 pF = 0.1 μF

For Coil
010 → 1×10^{0} = 1 μH
8R2 → 8.2×10^{0} = 8.2 μH
101 → 10×10^{1} = 100 μH

< VOLTAGE > MAIN BOARD (1/3)

	IC1	IC2	IC3	IC5	IC9	IC14	IC10	IC102	IC103	IC107	IC108	IC109	IC110	IC111	IC112	IC113	IC114	IC116	IC120	IC121
Pin 1	2.3	2.3	5.1	0	0	–	4.5	2.2	2.3	3.3	–	3.7	2.3	2.3	2.3	3.2	3.2	1.7	2.7	4.8
2	5.1	5.1	3.3	2.6	2.6	0.8	1.9	4.9	0.1	3.2	3.3	1.9	1.9	0	0	0	1.2	1.2	3.3	3.2	4.9
3	0	0	1.3	1.7	2.6	0	4.6	2.3	2.3	3.3	0	3.9	2.2	2.3	2.4	1.2	1.2	3.3	1.6	4.9
4	2.3	4.9	0	3.0	3	2.5	0	0	0	3.3	0.1	0	0	3	2.5	0	0	3.0	0	0
5	1.9	1.9	3.3	3.1	2.5	0	4.6	4.1	2.9	3.4	3.4	4.6	4.9	2.9	1.6	0	0	1.6	1.6	4.9
6	0.2	0.2	0	3.3	2.3	3.3	1.3	4.9	4.9	0		1.2	4.9	4.9	1.7	0	0	1.5	0.1	0
7	4.9	5.0	3.3	3.3	5.1	2.0	2.5	1.9	1.6	1.4		2.5	1.6	1.6	4.9	4.1	4.1	3.3	0.6	1.9
8	2.5	2.8	3.3	0	5.1	0	0	0	0	1.4		4.9	0	0	1.9	4.9	4.9	0	3.3	0
9				0						0								0		3.0
10				–						0								3.3		4.9
11				0						0								0		4.9
12				0						0								0		0
13				5.1						0.1								3.3		4.9
14				1.3						0								3.3		0
15				5.1						0								3.3		2.4
16				5.1						0								3.3		4.9
17				1.5						0										
18				–						0										
19				–						4.0										
20				–						3.7										
21				–																
22				–																
23				–																
24				5.1																

	B	C	E
Q1	0.1	0.1	0
Q101	2.4	4.5	1.9
Q104	1.6	0	2.2
Q105	1.6	4.5	1.6
Q106	1.6	0	2.2

< WAVEFORM > MAIN BOARD (1/3)

1. 10 μs/DIV, 0.5 V/DIV

2. 10 μs/DIV, 0.2 V/DIV

3. 10 μs/DIV, 0.5 V/DIV

4. 0.1 μs/DIV, 2 V/DIV

5. 20 μs/DIV, 0.5 V/DIV

6. 0.2 μs/DIV, 1 V/DIV

7. 20 μs/DIV, 1 V/DIV

8. 5 ms/DIV, 1 V/DIV

9. 20 ns/DIV, 0.5 V/DIV

SCHEMATIC DIAGRAM OF MAIN BOARD (2/3)

MAIN BOARD (2/3)

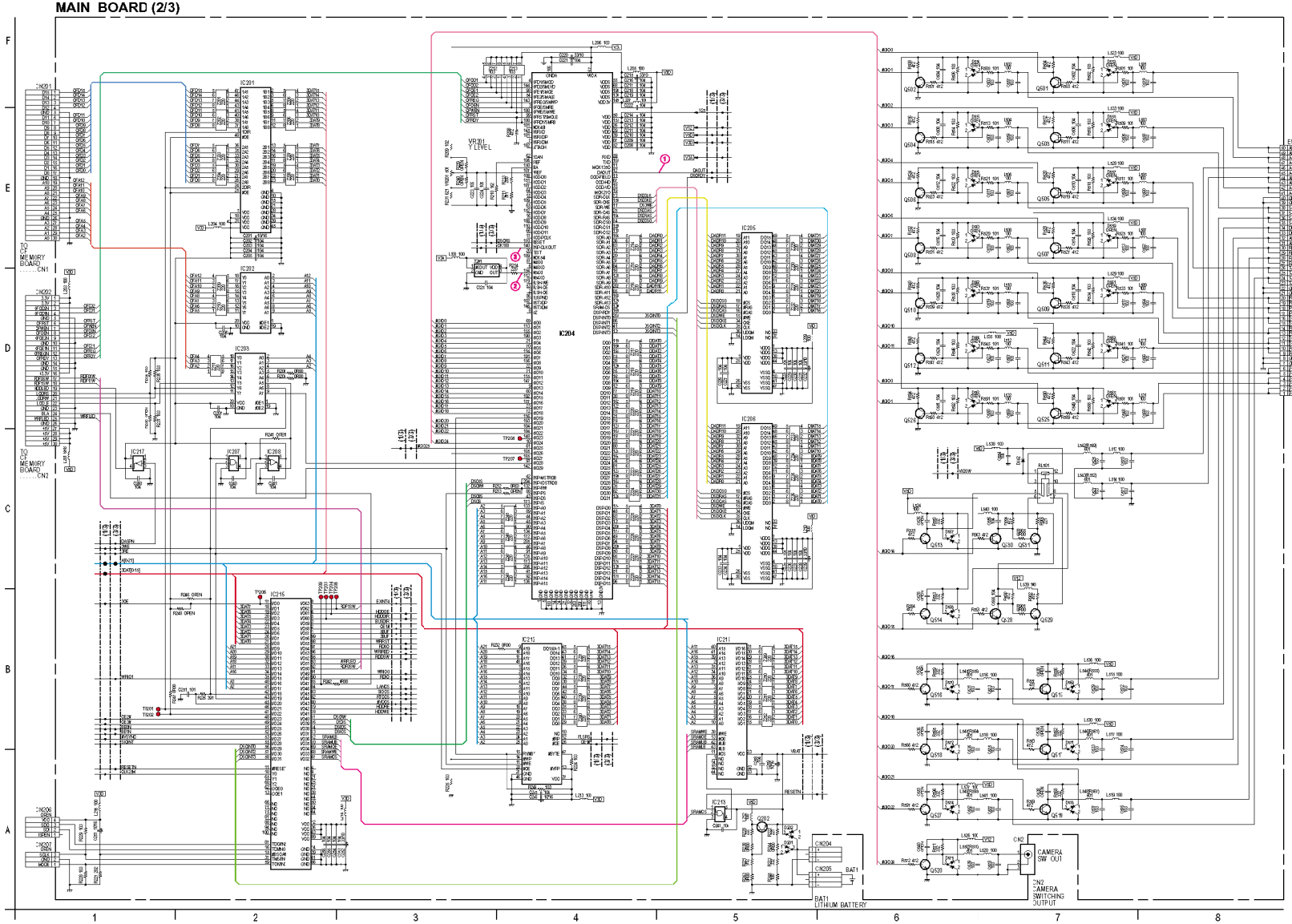

Note: The value indicated in the schematic diagram should be read as follows:

- Multiplier (0 - 5)
- 2nd. Significant Digit (0 - 9)
- 1st. Significant Digit (1 - 9)

<Example>

For Resistor:

330 ➡ 33 x 10 ^{0} = 33 Ω
561 ➡ 56 x 10 ^{1} = 560 Ω
123 ➡ 12 x 10 ^{3} = 12k Ω
R00 = 0 Ω

For Capacitor
(Except Electrolytic Capacitor and Tantalum Capacitor):

820 ➡ 82 x 10 ^{0} = 82 pF
102 ➡ 10 x 10 ^{2} = 1000 pF = 0.001 μF
104 ➡ 10 x 10 ^{4} = 100000 pF = 0.1 μF

For Coil:

010 ➡ 1 x 10 ^{0} = 1 μH
8R2 ➡ 8.2 x 10 ^{0} = 8.2 μH
101 ➡ 10 x 10 ^{1} = 100 μH

< INDEX >
MAIN BOARD (2/3)

IC201	E2	Q202	A5	Q615	B7	D201	A5
IC202	D2	Q501	F7	Q516	B6	D202	A5
IC203	D2	Q502	F6	Q517	B7	D562	C7
IC204	D4	Q503	E7	Q518	B6	D567	C3
IC205	E5	Q504	E6	Q519	A7	D568	B5
IC206	C5	Q505	E7	Q520	A6	D569	B7
IC207	D2	Q506	E6	Q525	D7	D570	B5
IC208	D2	Q507	E7	Q526	D6	D571	B7
IC212	B4	Q508	E6	Q527	A6	D572	B5
IC213	A5	Q509	D7	Q528	B7	D573	A7
IC215	B2	Q510	D6	Q529	B7	D574	A5
IC216	B5	Q511	D7	Q530	C7	D575	A5
IC217	C1	Q512	D6	Q531	C7		
		Q513	C6				
		Q514	B6				

< WAVEFORM >
MAIN BOARD (2/3)

1. 10 μs/DIV, 0.1 V/DIV

2. 20 ms/DIV, 0.5 V/DIV

3. 30 ms/DIV, 0.5 V/DIV

< VOLTAGE >
MAIN BOARD (2/3)

	IC202	IC203	IC207	IC209	IC215	IC217
Pin 1	0	0	3.4	3.4	5.0	–
2	0	3.4	3.4	3.4	0	4.6
3	0	0	0	0	0	0
4	0	3.4	0	0	0	0
5	0	3.4	3.4	3.3	3.4	
6	3.2	0				
7	6.5	0				
8	3.3	3.4				
9	3.3	3.4				
10	0	0				
11	3.3	3.3				
12	3.3	3.3				
13	3.0	0				
14	3.1	0				
15	0	0				
16	0	0				
17	0	0				
18	0	3.3				
19	0	0				
20	3.4	3.4				

	B	C	E
Q2024	3.5	5.1	3.2
Q501	0.7	0	0
Q502	0.7	0	0
Q503	0.7	0	0
Q504	0.7	0	0
Q505	0.7	0	0
Q506	0.7	0	0
Q507	0.7	0	0
Q508	0.7	0	0
Q509	0.7	0	0
Q510	0.7	0	0
Q511	0.7	0	0
Q512	0.7	0	0
Q513	0.7	0	0
Q514	0.7	0	0
Q515	0.7	0	0
Q516	0.7	0	0
Q517	0.7	0	0
Q518	0.7	0	0
Q519	0.7	0	0
Q520	0.7	0	0
Q525	0.7	0	0
Q526	0.7	0	0
Q527	0.7	0	0
Q528	0.7	0	0
Q529	0.7	0	0
Q530	0.7	0	0
Q531	0.7	0	0

CONDUCTOR VIEW OF MAIN BOARD

MAIN BOARD

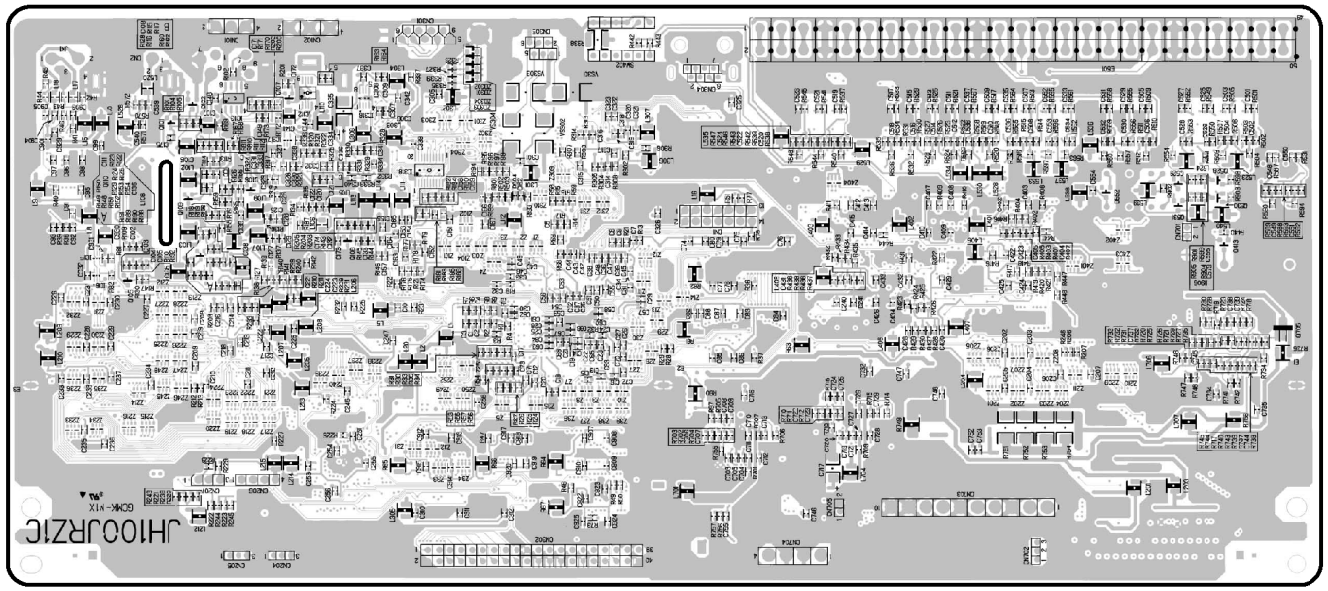

(PATTERN SIDE VIEW)

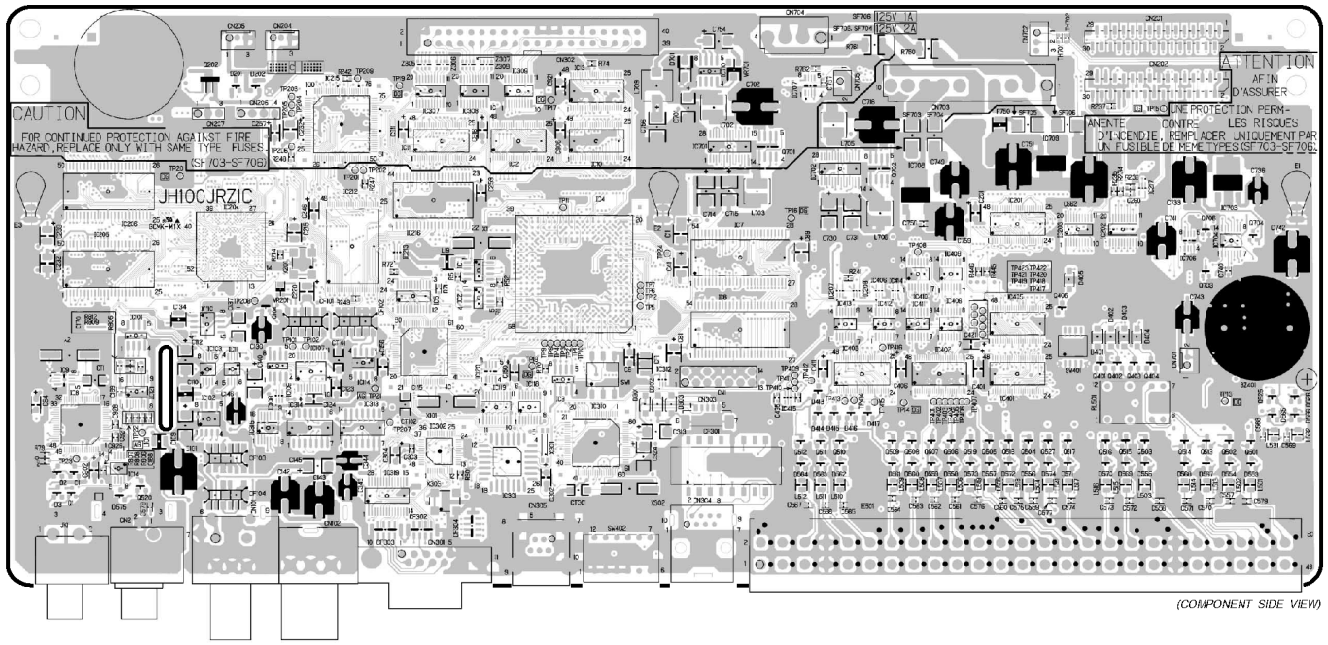

(COMPONENT SIDE VIEW)

< INDEX >
MAN BOARD

IC1	B3	Q1	A1	D1	A1
IC2	B3	Q101	E1	D2	A1
IC3	B3	Q104	B2	D3	A1
IC4	B3	Q105	E1	D102	F2
IC5	B3	Q106	E2	D201	C2
IC6	B4	Q107	F2	D202	C2
IC7	B4	Q108	E2	D401	B6
IC8	B1	Q109	E2	D402	B6
IC9	B1	Q110	E2	D403	B6
IC10	C3	Q202	C2	D404	B6
IC11	C3	Q401	B6	D405	B6
IC12	C3	Q402	B6	D413	B4
IC13	C3	Q403	B6	D414	B4
IC14	A1	Q404	B6	D415	B4
IC15	E1	Q405	B6	D416	B5
IC16	E1	Q413	E6	D417	B5
IC101	B1	Q501	A6	D552	E6
IC102	B2	Q502	A6	D553	A6
IC103	B2	Q503	A6	D554	A6
IC107	B2	Q504	A5	D555	A6
IC105	B2	Q505	A5	D556	A5
IC109	B2	Q506	A5	D557	A5
IC110	B2	Q507	A5	D558	A5
IC111	B2	Q508	A5	D559	A5
IC112	F2	Q509	A5	D560	A5
IC113	F2	Q510	A5	D561	A5
IC114	B2	Q511	A4	D562	A5
IC115	B3	Q512	A4	D563	A4
IC118	B3	Q513	A6	D564	A4
IC123	B3	Q514	A6	D565	B7
IC121	B1	Q515	A6	D566	B7
IC201	B5	Q516	A6	D567	A6
IC202	B6	Q517	A6	D568	A6
IC203	B6	Q518	A5	D569	A6
IC204	B2	Q519	A5	D570	A6
IC205	B1	Q520	A1	D571	A6
IC233	C1	Q525	B7	D572	A5
IC207	B5	Q526	B7	D573	A5
IC303	B6	Q527	A5	D574	A5
IC212	B2	Q528	F6	D576	A1
IC213	B3	Q529	F6	D701	C5
IC216	C2	Q530	E6		
IC215	C3	Q531	E6	ZD301	F3
IC217	C6	Q701	C4	ZD302	F3
IC301	A3	Q702	C5	ZD303	F3
IC302	A3	Q703	B6	ZD304	F3
IC307	C3	Q704	B6		
IC303	C3	Q705	E7		
IC309	C3	Q706	B6		
IC313	B2				
IC314	B2				
IC315	B2				
IC316	F2				
IC317	F2				
IC318	F3				
IC319	A2				
IC401	B6				
IC402	B6				
IC403	B6				
IC405	B6				
IC406	B6				
IC404	B6				
IC701	C4				
IC702	C4				
IC703	C6				
IC704	B6				
IC705	B6				
IC707	C4				
IC708	C5				
IC709	C6				
IC710	C4				

SCHEMATIC DIAGRAM OF MAIN BOARD (3/3)

MAIN BOARD (3/3)

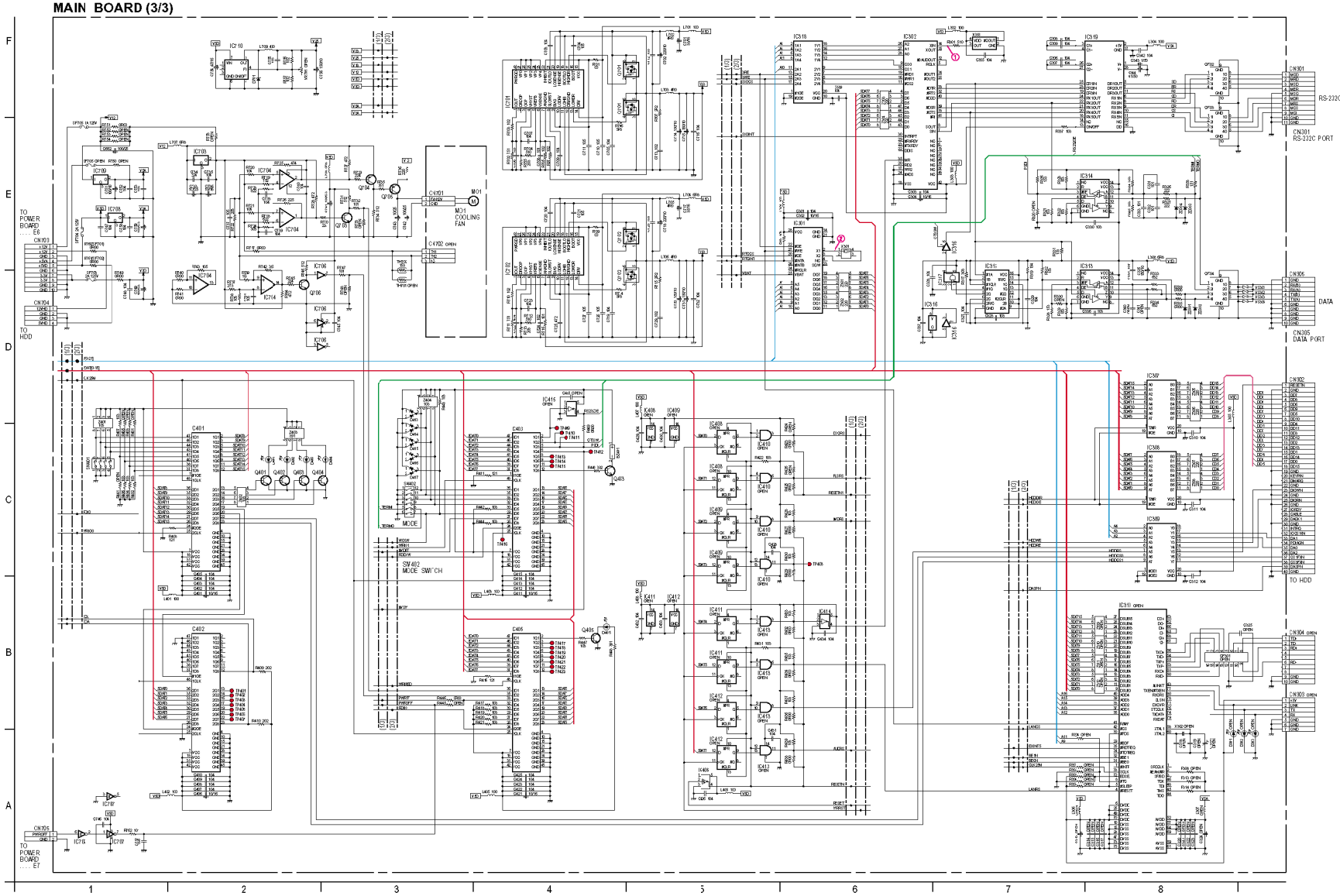

Note: The value indicated in the schematic diagram should be read as follows:

Multiplier (0 - 8)
2nd. Significant Digit (0 - 9)
1st. Significant Digit (1 - 9)

<Example>

For Resistor:
330 → 33 x 10^0 = 33 Ω
561 → 56 x 10^1 = 560 Ω
123 → 12 x 10^3 = 12k Ω
0R00 = 0 Ω

For Capacitor:
(Except Electrolytic Capacitor and Tantalum Capacitor):
82 → 82 x 10^0 = 82 pF
102 → 10 x 10^2 = 1000 pF = 0.001 μF
104 → 10 x 10^4 = 100000 pF = 0.1 μF

For Coil:
010 → 1 x 10^0 = 1 μH
8R2 → 8.2 x 10^0 = 8.2 μH
101 → 10 x 10^1 = 100 μH

<VOLTAGE> MAIN BOARD (3/3)

Pin	IC307	IC308	IC309	IC313	IC314	IC315	IC316	IC317	IC318	IC401	IC402	IC403	IC404	IC405	IC406	IC407	IC408	IC409	IC410	IC411	IC412	IC413	IC414	IC415	IC416	IC417	IC418	IC419	IC420
1	3.4	3.3	0	-	-	5.1	5	0	5.1	0	5	0.1	0	0.6	5.1	0.1	0
2	1.9	0.1	3.4	5.1	5.1	5	5.1	0	5.1	10.2	5.1	5.1	0.6	3.3	4.9	-	-
3	5.1	3.0	0	0	0	5.1	5	0	0	0	10.2	0	0	0	3.1	-	-
4	1.6	3.0	0	0	0.1	5.1	5	0	5.1	0	5.1	0	0				1.2
5	1.9	0.1	3.3	5.1	0.1	0	5	5.1	5.1	5.1	7.9	5.1	4.3				1
6	1.3	0.1	3.3	0	0	0	5				8.5	0	3.8				0
7	1.2	0.1	5.1	0	0	5.1	5.1				6.7	5.1	3.8				5.1
8	1.9	0.1	0	-	-	0	5.1				2.8	5.1	4.3				2.8
9	5.4	0.1	0	2.7	-	-	5.1				0						
10	0	0	0	2.4	0	5.1					0						
11	3.2	3.2	0	2.4	2.2	5.1					0						
12	3.3	3.3	0	2.7	2.9	5.1					0						
13	3.3	5.1	5.1	5.1	5.1	0					0						
14	3.3	3.3	5.1	5.1	5.1	0					10.1						
15	3.3	3.3	5.1			0											
16	3.3	3.3	0			5.1											
17	3.3	2.3	0														
18	3.3	-	5.0														
19	3.4	3.3	0														
20	5.1	5.1	5.1														

Pin	IC701	IC702	IC703	IC704	IC706	IC707	IC708	IC709	IC710
1	4.5	0	0	0	0	0	0	5.1	0
2	4.5	0	0	0	0	0	0	5.1	0
3	4.5	1	0	0	10.2	0	0	0	1
4	0	-	15	18		5.1	0	0	
5	3.8	-	15	18		5.1	0	0	
6	1.8	4.1	15	18		5.1	0	0	
7	1.9	5.1	0	0		5.1	0	0	
8	3.4	5.1	50	50					
9	0	-	50	50					
10	0	-	50	50					
11	5.1	3.2	18	18					
12	0	-	0	0					
13	4.5	1.6	0	0					
14	4.5	5.1	50	50					
15	4.5	0	50	50					
16	5.1	0	75	63					
17	5.1	0	16	34					
18	3.0	-	33	18					
19	5.1	0	50	50					
20	3.4	-	33	18					

	B	C	E
Q401	0.7	1.0	0
Q402	0.7	1.0	0
Q403	0.7	1.0	0
Q404	0.7	1.0	0
Q405	0.7	1.0	0
Q406	0.7	1.0	0
Q407	0.7	1.0	0
Q408	0.7	1.0	0
Q409	0.7	1.0	0
Q410	0.7	1.0	0
Q411	0.7	1.0	0
Q412	0.7	1.0	0
Q413	0.7	1.0	0
Q414	0.7	1.0	0
Q415	0.7	1.0	0
Q416	0.7	1.0	0
Q417	0.7	1.0	0
Q418	0.7	1.0	0
Q419	0.7	1.0	0
Q420	0.7	1.0	0

Pin	Q701	Q702
1	5.1	1.8
2	5.6	34
3	0	0
4	1.6	27
5	1.6	27
6	5.1	1.8
7	5.1	1.8
8	5.1	1.8
9	5.1	50

<INDEX> MAIN BOARD (3/3)

IC301 E6	IC406 A5	Q401 C2	D401 C2	Z7301 D6
IC302 F6	IC414 B6	Q402 C2	D402 C2	Z7302 D6
IC307 D8	IC701 F4	Q403 C2	D405 C2	Z7303 E6
IC308 C8	IC702 E4	Q404 C3	D406 C3	Z7304 E6
IC309 C8	IC703 E2	Q405 B4	D405 B4
IC313 D7/D8	IC704 D2,E2	Q413 C4	D411 D3
IC314 E8	IC706 D2,E2	Q701 F1	D411 C3
IC315 D7	IC707 A1	Q702 D5,E5	D413 C3
IC316 D7,E7	IC708 E1	Q703 E3	D416 C3
IC317 D7	IC709 E1	Q704 E3	D417 C3
IC318 F6	IC710 F2	Q706 E3	D701 F2
IC319 F7/F8		Q708 D2	
IC401 C2			
IC402 B2			
IC403 C4			
IC405 B4			

<WAVEFORM> MAIN BOARD (3/3)

1. 10 ms/DIV, 2 VDIV

2. 5 ms/DIV, 0.2 VDIV

SCHEMATIC DIAGRAM / CONDUCTOR VIEW OF CF MEMORY BOARD

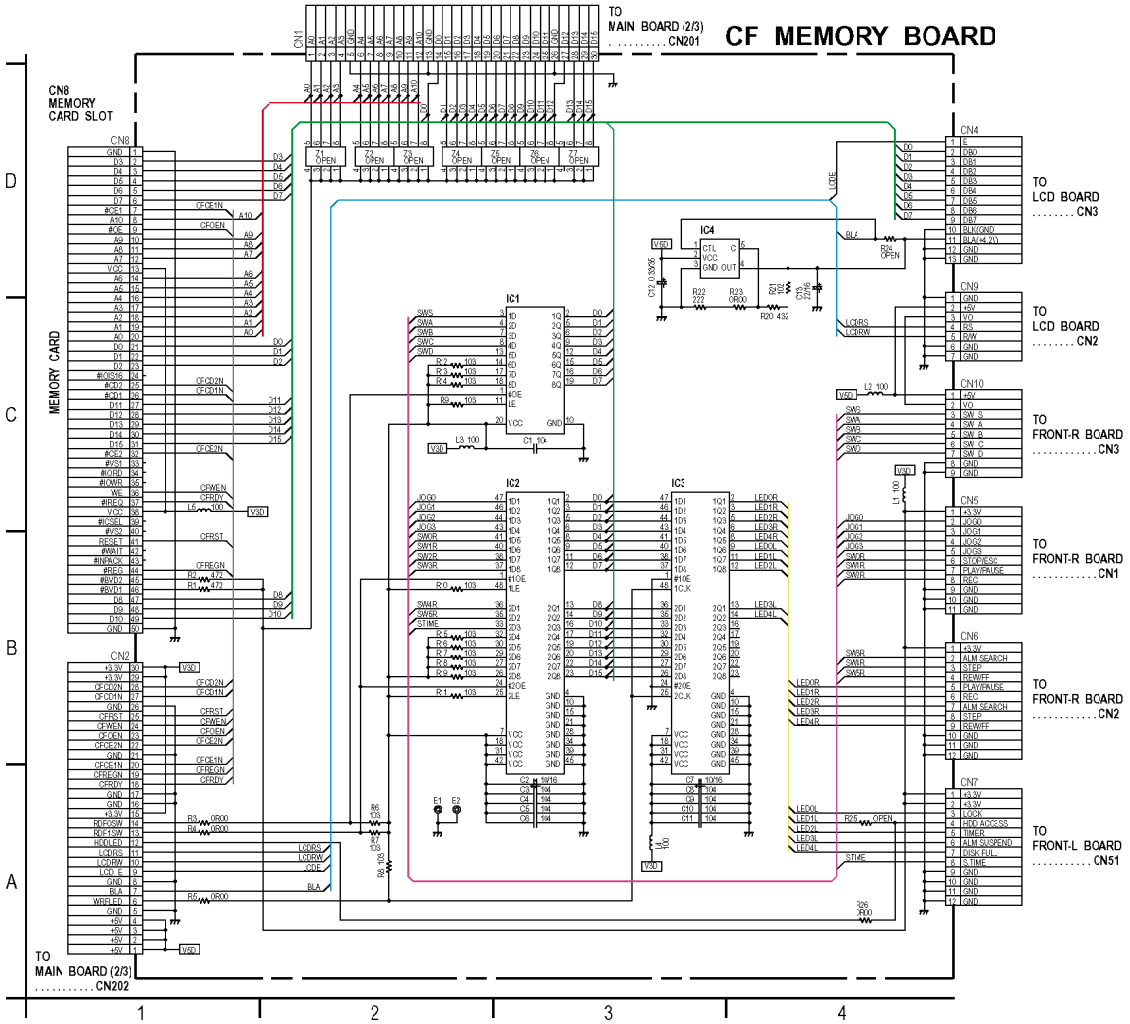

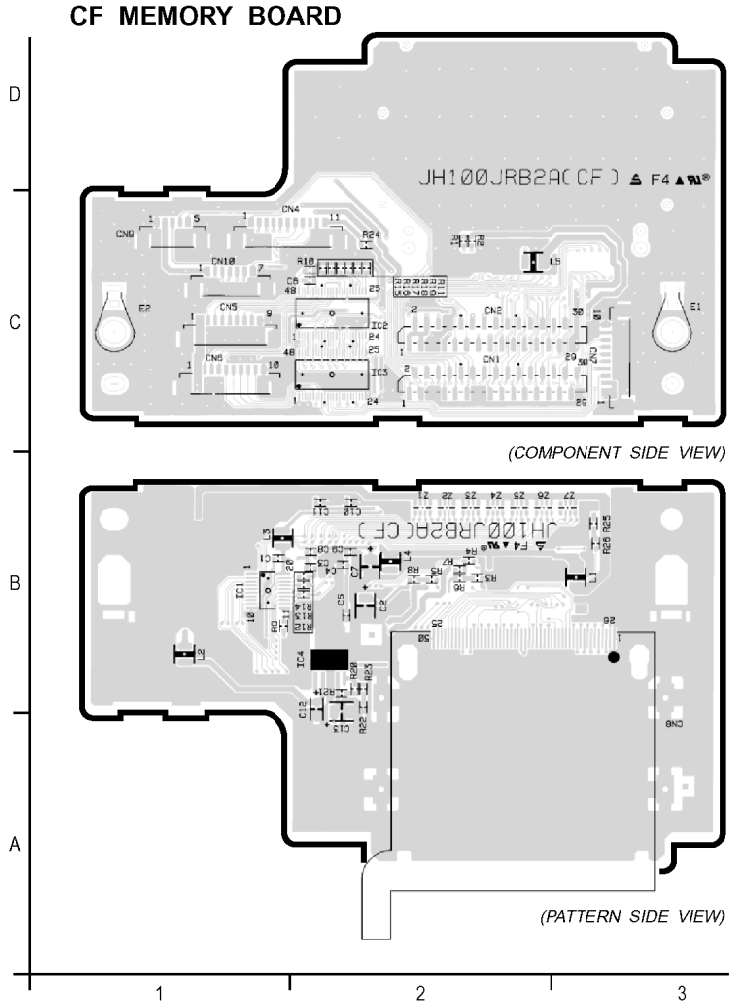

Note: The value indicated in the schematic diagram should be read as follows:

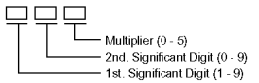

<Example>

For Resistor:
- 330 ➡ 33×10^0 = 33 Ω
- 561 ➡ 56×10^1 = 560 Ω
- 123 ➡ 12×10^3 = 12k Ω
- 0R00 = 0 Ω

For Capacitor
(Except Electrolytic Capacitor and Tantalum Capacitor):
- 820 ➡ 82×10^0 = 82 pF
- 102 ➡ 10×10^2 = 1000 pF = 0.001 μF
- 104 ➡ 10×10^4 = 100000 pF = 0.1 μF

For Coil:
- 010 ➡ 1×10^0 = 1 μH
- 8R2 ➡ 8.2×10^0 = 8.2 μH
- 101 ➡ 10×10^1 = 100 μH

< INDEX >
CF MEMORY BOARD

IC1	C3
IC2	A3/B3/C3
IC3	A3/B3/C3
IC4	D3/D4

<VOLTAGE >
CF MEMORY BOARD

IC1			
Pin 1	3.4	Pin11	3.4
2	4.8	12	1.8
3	3.4	13	3.4
4	3.4	14	3.4
5	4.8	15	1.8
6	4.8	16	1.8
7	3.4	17	3.4
8	3.4	18	3.4
9	1.0	19	1.8
0	0	20	3.4

	IC4
Pin 1	–
2	–
3	0
4	–
5	–

< INDEX >
CF MEMORY BOARD

IC1	B1
IC2	C2
IC3	C2
IC4	B2

CONDUCTOR VIEW OF POWER BOARD

POWER BOARD

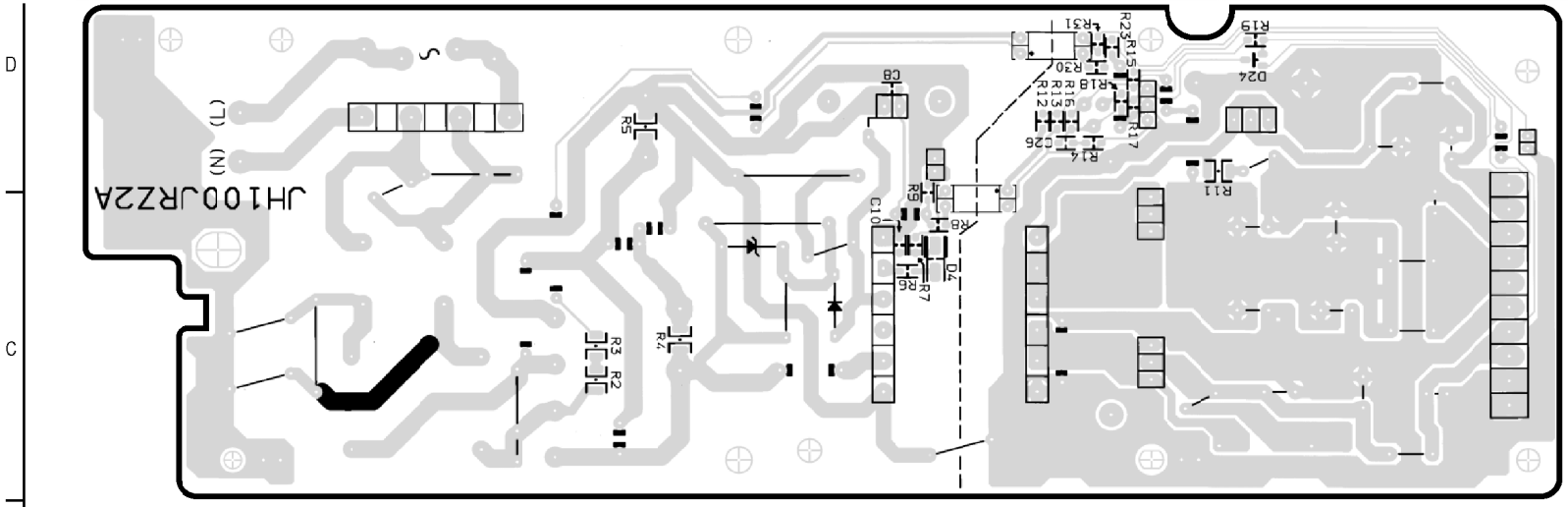

(PATTERN SIDE VIEW)

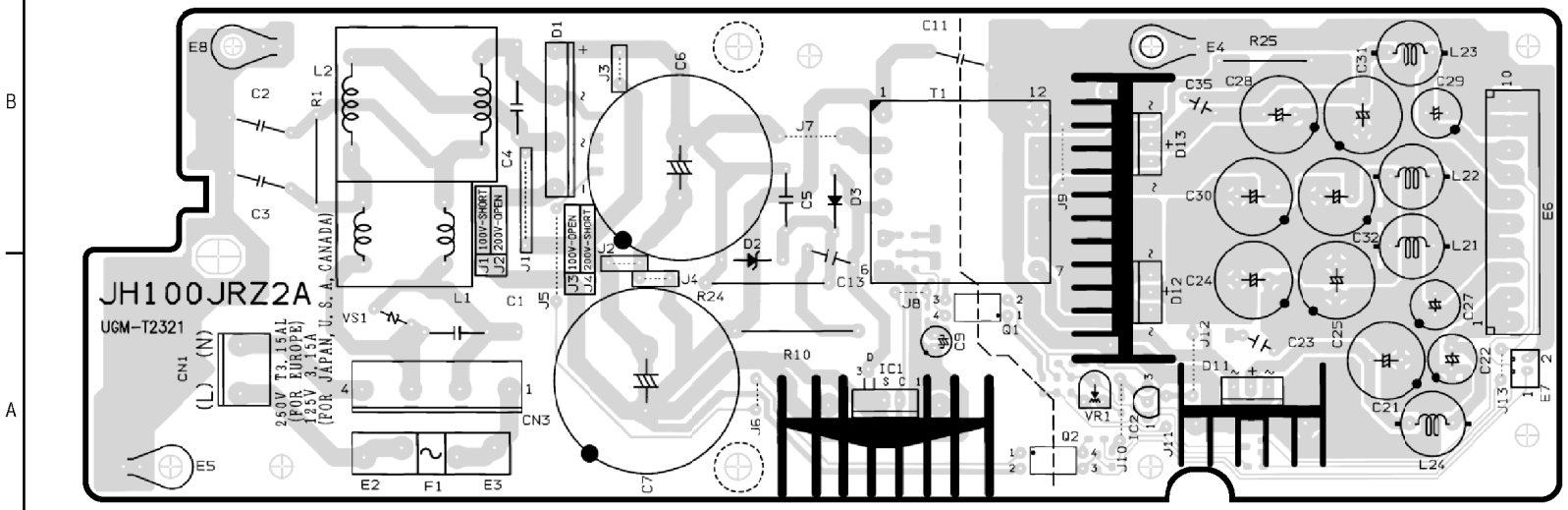

(COMPONENT SIDE VIEW)

< INDEX >
POWER BOARD

IC1	A3
IC2	A4
Q1	A4
Q2	A4
D1	B2
D2	A3
D3	B3
D4	C3
D11	A4/A5
D12	A4
D13	B4

SCHEMATIC DIAGRAM OF POWER BOARD

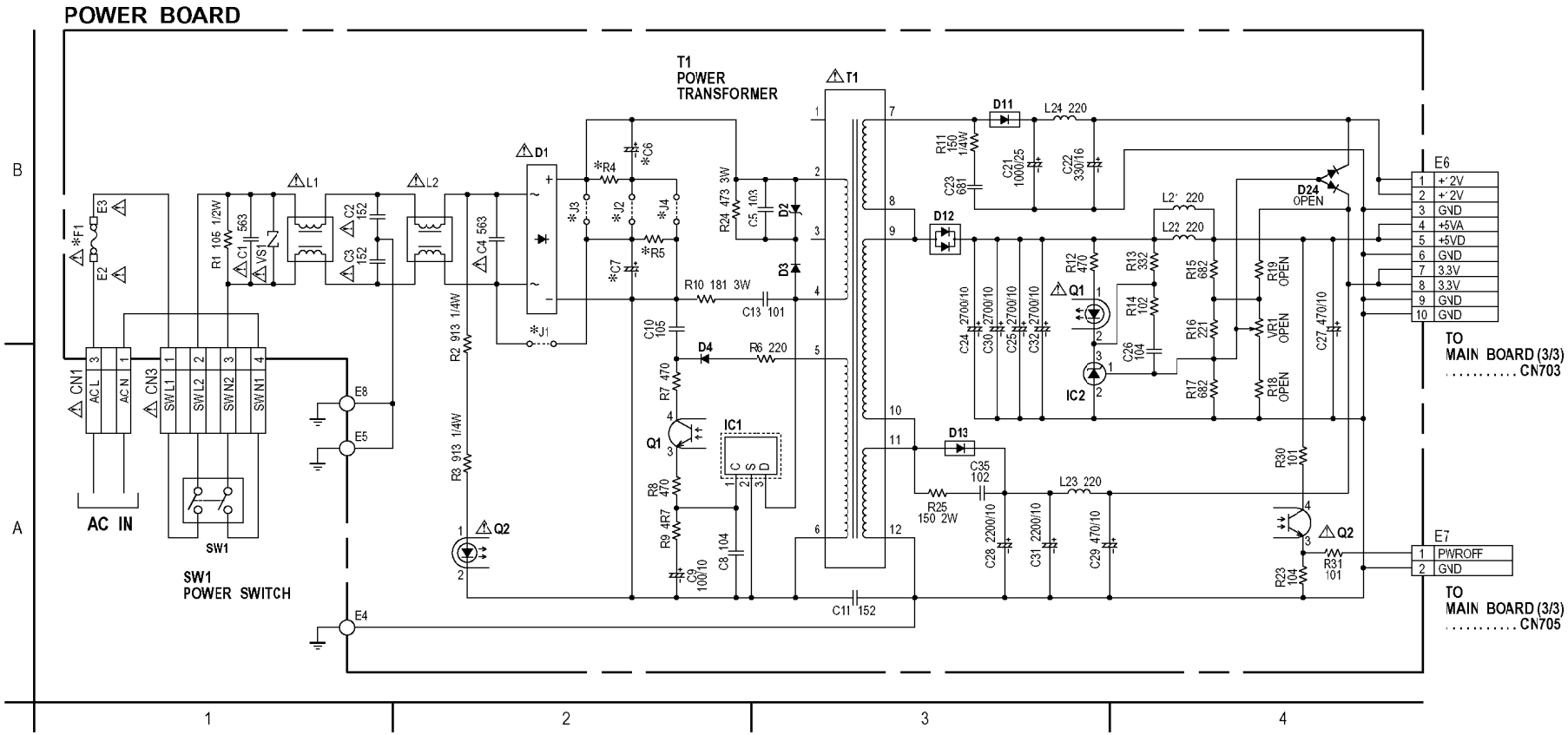

*

	NTSC	PAL
F1	3.15A 125V	3.15A 250V
J1	SHORT	OPEN
J2	SHORT	OPEN
J3	OPEN	SHORT
J4	OPEN	SHORT
R4	334	OPEN
R5	334	OPEN
C6	470/200	120/400
C7	470/200	120/400

Note: The value indicated in the schematic diagram should be read as follows:

Multiplier (0 - 5)
2nd. Significant Digit (0 - 9)
1st. Significant Digit (1 - 9)

<Example>

For Resistor:
330 ➡ 33 x 10^0 = 33 Ω
561 ➡ 56 x 10^1 = 560 Ω
123 ➡ 12 x 10^3 = 12k Ω
0R00 = 0 Ω

For Capacitor
(Except Electrolytic Capacitor and Tantalum Capacitor):
820 ➡ 82 x 10^0 = 82 pF
102 ➡ 10 x 10^2 = 1000 pF = 0.001 μF
104 ➡ 10 x 10^4 = 100000 pF = 0.1 μF

For Coil:
010 ➡ 1 x 10^0 = 1 μH
8R2 ➡ 8.2 x 10^0 = 8.2 μH
101 ➡ 10 x 10^1 = 100 μH

Important safety notice

Components Identified by " ⚠ " mark have special characteristics for safety.
When replacing any of these components, use only manufacturer's specified parts.

< INDEX >
POWER BOARD

IC1	A2/A3
IC2	A3
Q1	A2,B3
Q2	A2,A4
D1	B2
D2	B3
D3	B3
D4	A2
D11	B3
D12	B3
D13	A3

SCHEMATIC DIAGRAM / CONDUCTOR VIEW OF FRONT-R BOARD

FRONT-R BOARD

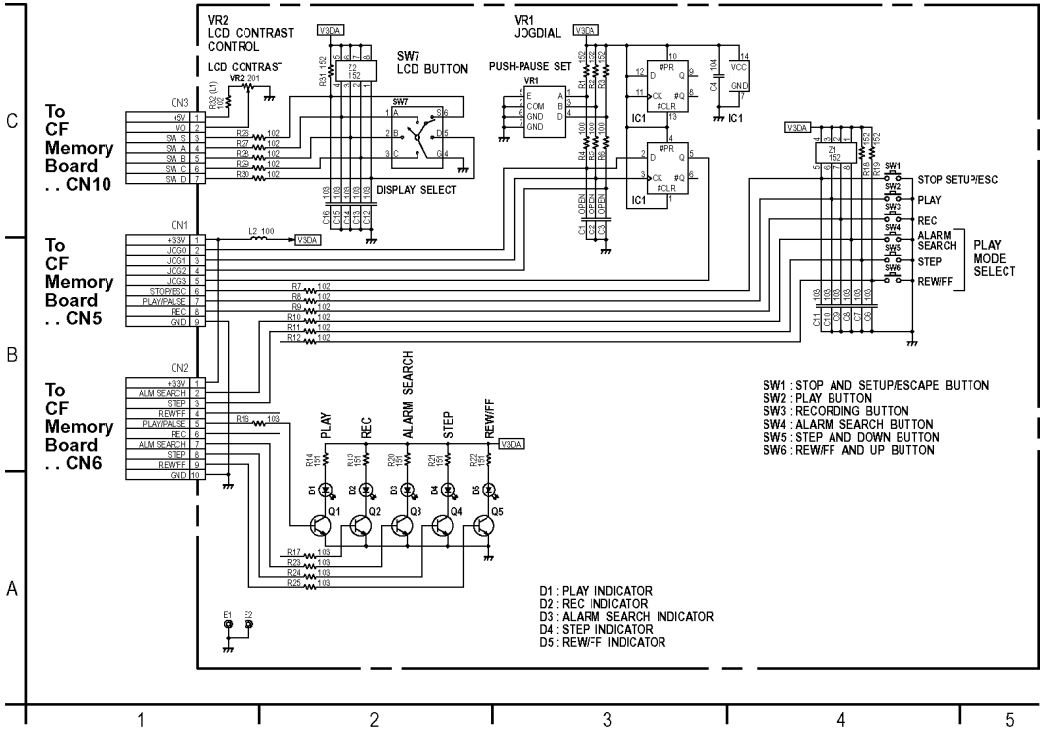

FRONT-R BOARD

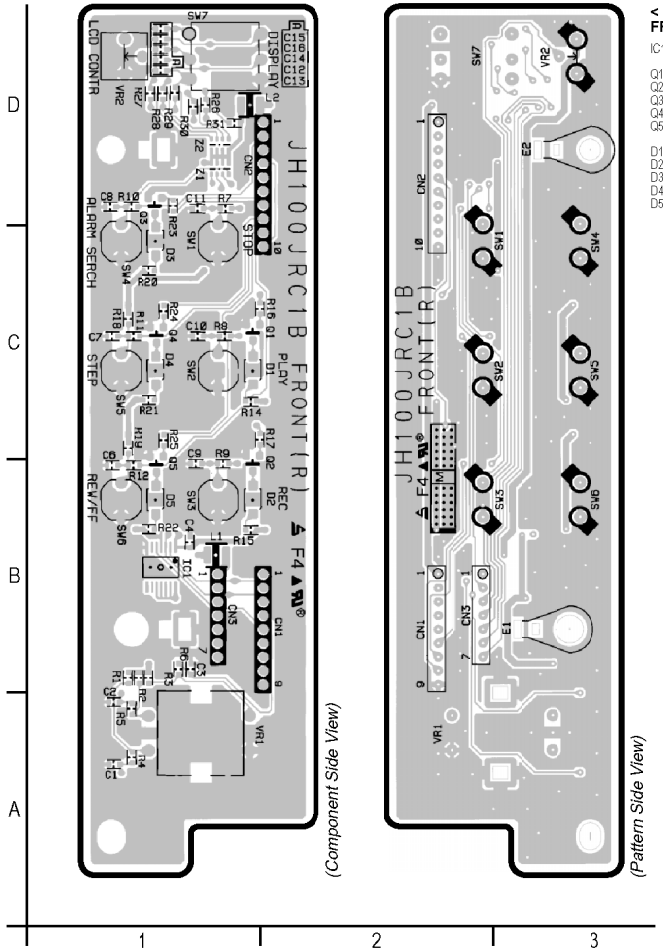

< INDEX >
FRONT-R BOARD

IC1	B1
Q1	C1
Q2	B1
Q3	D1
Q4	C1
Q5	B1
D1	C1
D2	B1
D3	C1
D4	C1
D5	B1

Note: The value indicated in the schematic diagram should be read as follows:

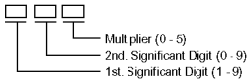

<Example>

For Resistor:
- 330 ➡ 33×10^{0} = 33 Ω
- 561 ➡ 56×10^{1} = 560 Ω
- 123 ➡ 12×10^{3} = 12k Ω
- 0R00 = 0 Ω

For Capacitor
(Except Electrolytic Capacitor and Tantalum Capacitor):
- 820 ➡ 82×10^{0} = 82 pF
- 102 ➡ 10×10^{2} = 1000 pF = 0.001 μF
- 104 ➡ 10×10^{4} = 100000 pF = 0.1 μF

For Coil:
- 010 ➡ 1×10^{0} = 1 μH
- 8R2 ➡ 8.2×10^{0} = 8.2 μH
- 101 ➡ 10×10^{1} = 100 μH

< INDEX >
FRONT-R BOARD

IC1	C3,C4
Q1	A2
Q2	A2
Q3	A2
Q4	A2
Q5	A2
D1	A2
D2	A2
D3	A2
D4	A2
D5	A2

SCHEMATIC DIAGRAM OF FRONT-L BOARD

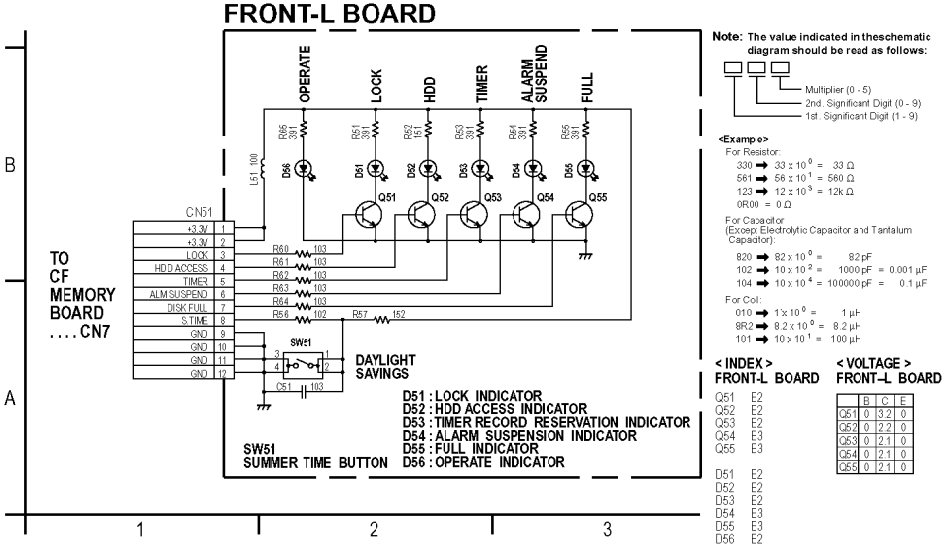

Note: The value indicated in the schematic diagram should be read as follows:

Multiplier (0 - 5)
2nd. Significant Digit (0 - 9)
1st. Significant Digit (1 - 9)

<Exampe>

For Resistor:

330 ➡ 33×10^0 = 33 Ω
561 ➡ 56×10^1 = 560 Ω
123 ➡ 12×10^3 = 12k Ω
0R00 = 0 Ω

For Capacitor
(Except Electrolytic Capacitor and Tantalum Capacitor):

820 ➡ 82×10^0 = 82pF
102 ➡ 10×10^2 = 1000pF = 0.001 μF
104 ➡ 10×10^4 = 100000pF = 0.1 μF

For Coil:

010 ➡ 1×10^0 = 1 μH
8R2 ➡ 8.2×10^0 = 8.2 μH
101 ➡ 10×10^1 = 100 μH

< INDEX > FRONT-L BOARD

Q51	E2
Q52	E2
Q53	E2
Q54	E3
Q55	E3
D51	E2
D52	E2
D53	E2
D54	E3
D55	E3
D56	E2

< VOLTAGE > FRONT-L BOARD

	B	C	E
Q51	0	3.2	0
Q52	0	2.2	0
Q53	0	2.1	0
Q54	0	2.1	0
Q55	0	2.1	0

SCHEMATIC DIAGRAM OF LCD BOARD

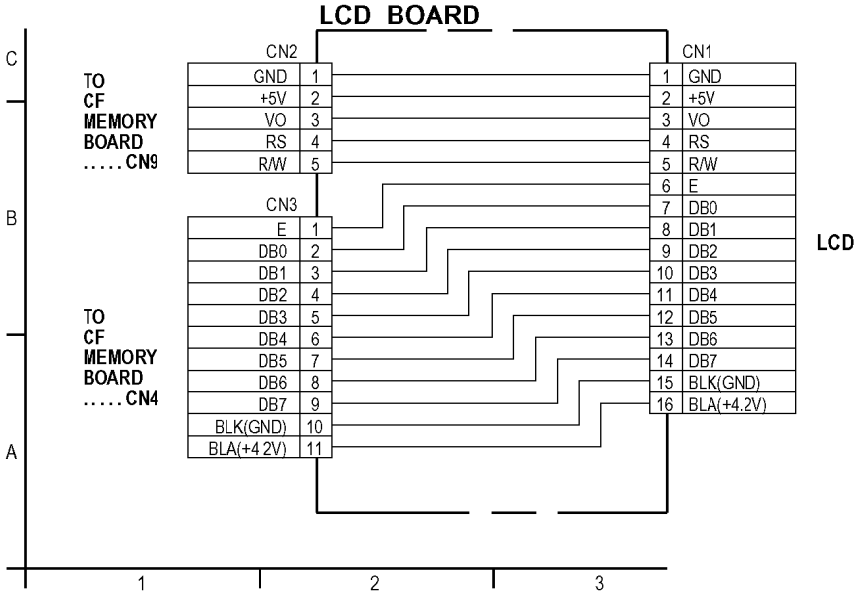

CONDUCTOR VIEW OF FRONT-L BOARD

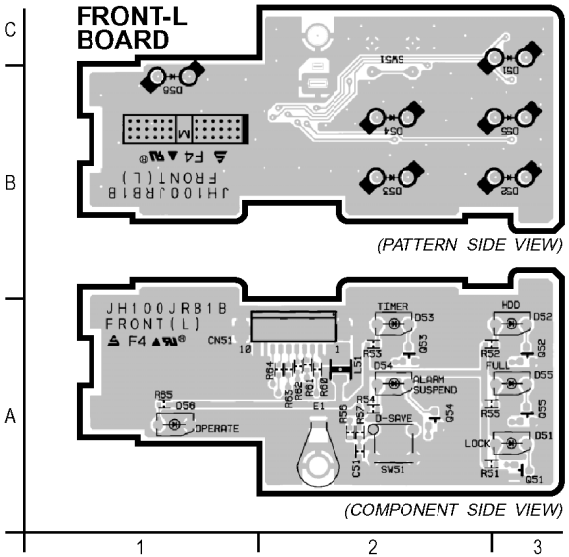

< INDEX > FRONT-L BOARD

Q51	A3
Q52	A3
Q53	A2
Q54	A2
Q55	A3
D51	A3
D52	A3
D53	A2
D54	A2
D55	A3
D56	A1

CONDUCTOR VIEW OF LCD BOARD

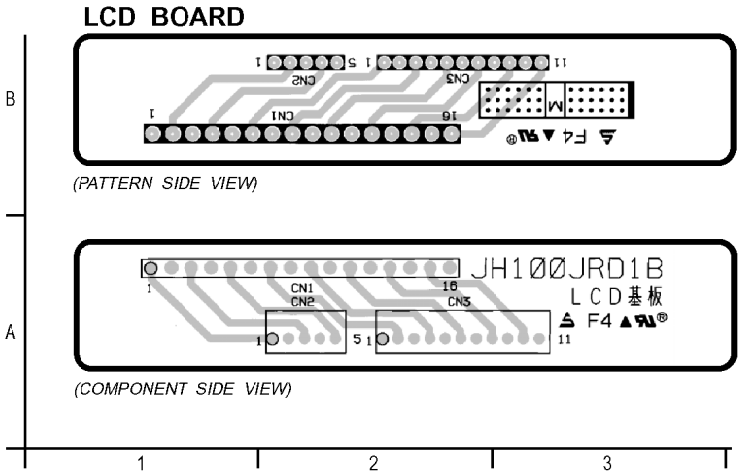

BLOCK DIAGRAM OF MAIN BOARD (1/2)

MAIN BOARD (1/2)

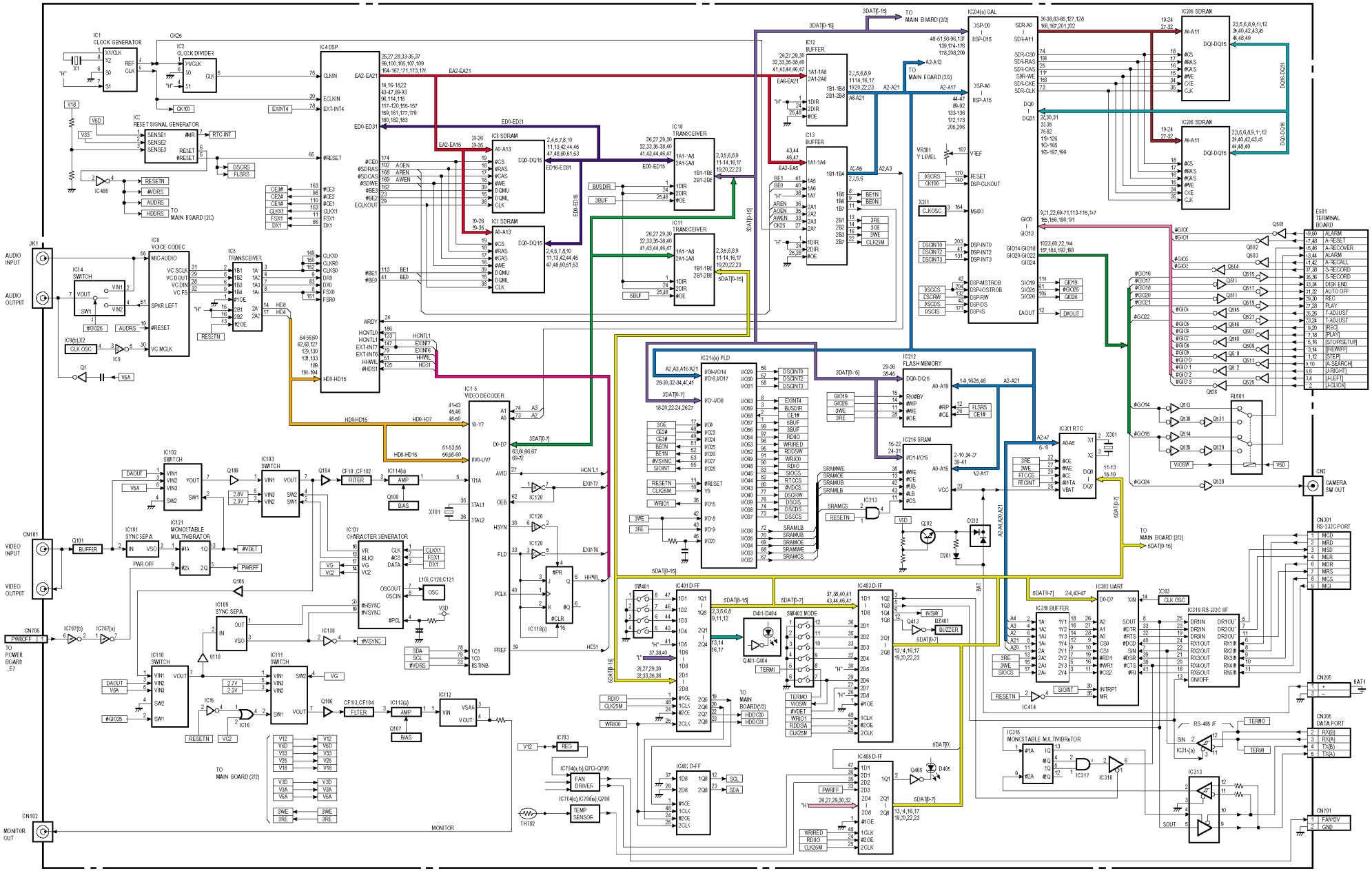

BLOCK DIAGRAM OF MAIN BOARD (2/2) / CF MEMORY BOARD / FRONT-L BOARD / FRONT-R BOARD / LCD BOARD

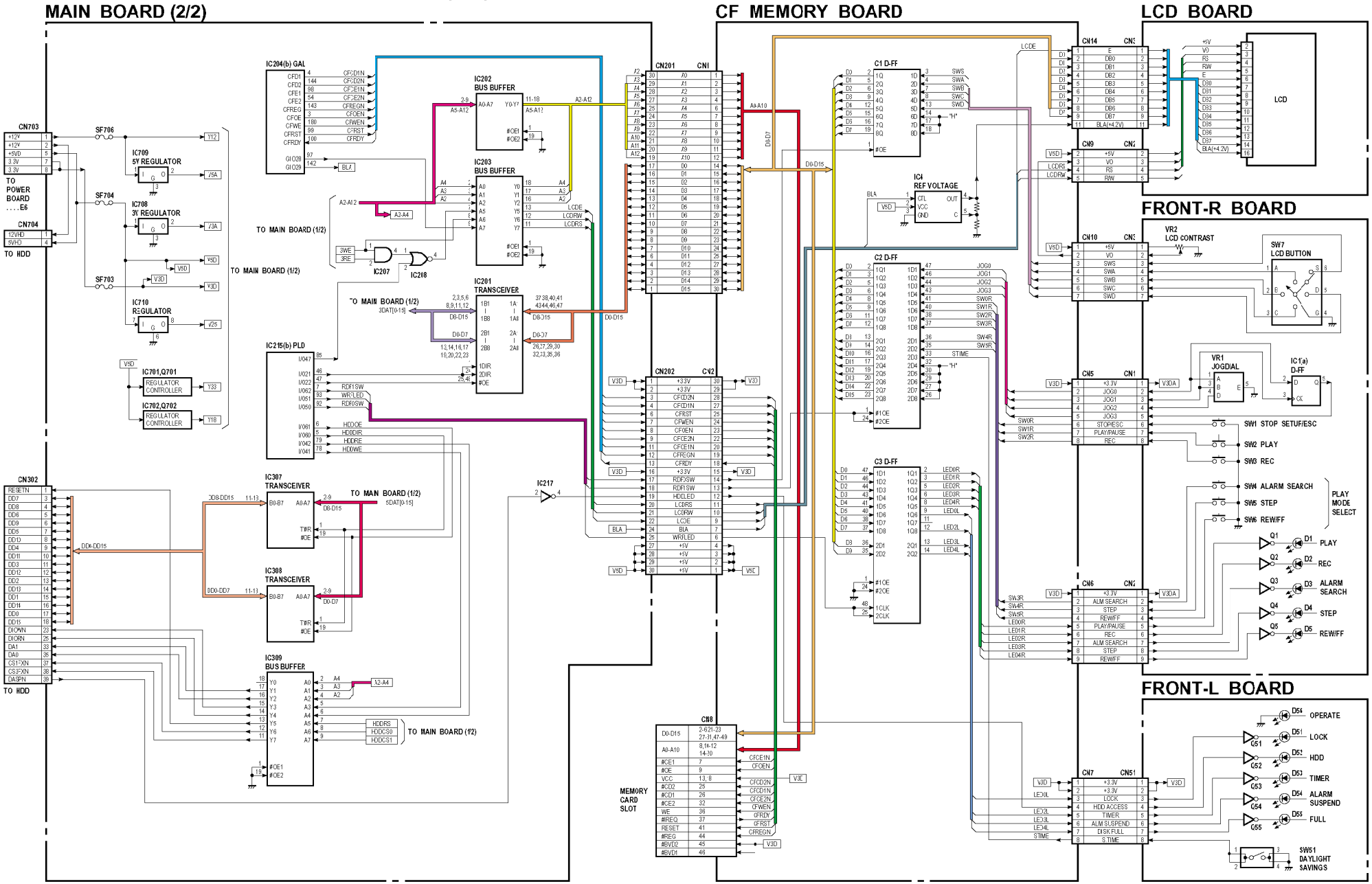

EXPLODED VIEW

◯Numbers show screws, washers nuts and etc.

No.	Screws	Description
①	XYN3+J10FX	Pan Head Screw and Washer Ass'y
②	XSB2+5FX	Binding Head Screws
③	XYN3+F8FXS	Pan Head Screw and Washer Ass'y
④	YWA1AA0270A4	Binding Head Tapping Screws
⑤	XTN3+10CFN	Binding Head Tapping Screws
⑥	XYN4+E8FN	Binding Head Screw and Washer Ass'y
⑦	XWC4BFN	Internatl Toothed Lock Washer
⑧	XYN4+J8FN	Pan Head Screw and Washer Ass'y
⑨	XYN3+F6FX	Pan Head Screw and Washer Ass'y
⑩	V1EB1041A4	Unifiy Screws
⑪	XYN3+J30FN	Pan Head Screw and Washer Ass'y
⑫	XSB3+6FX	Binding Head Screws
⑬	XSB2+6FX	Binding Head Screws

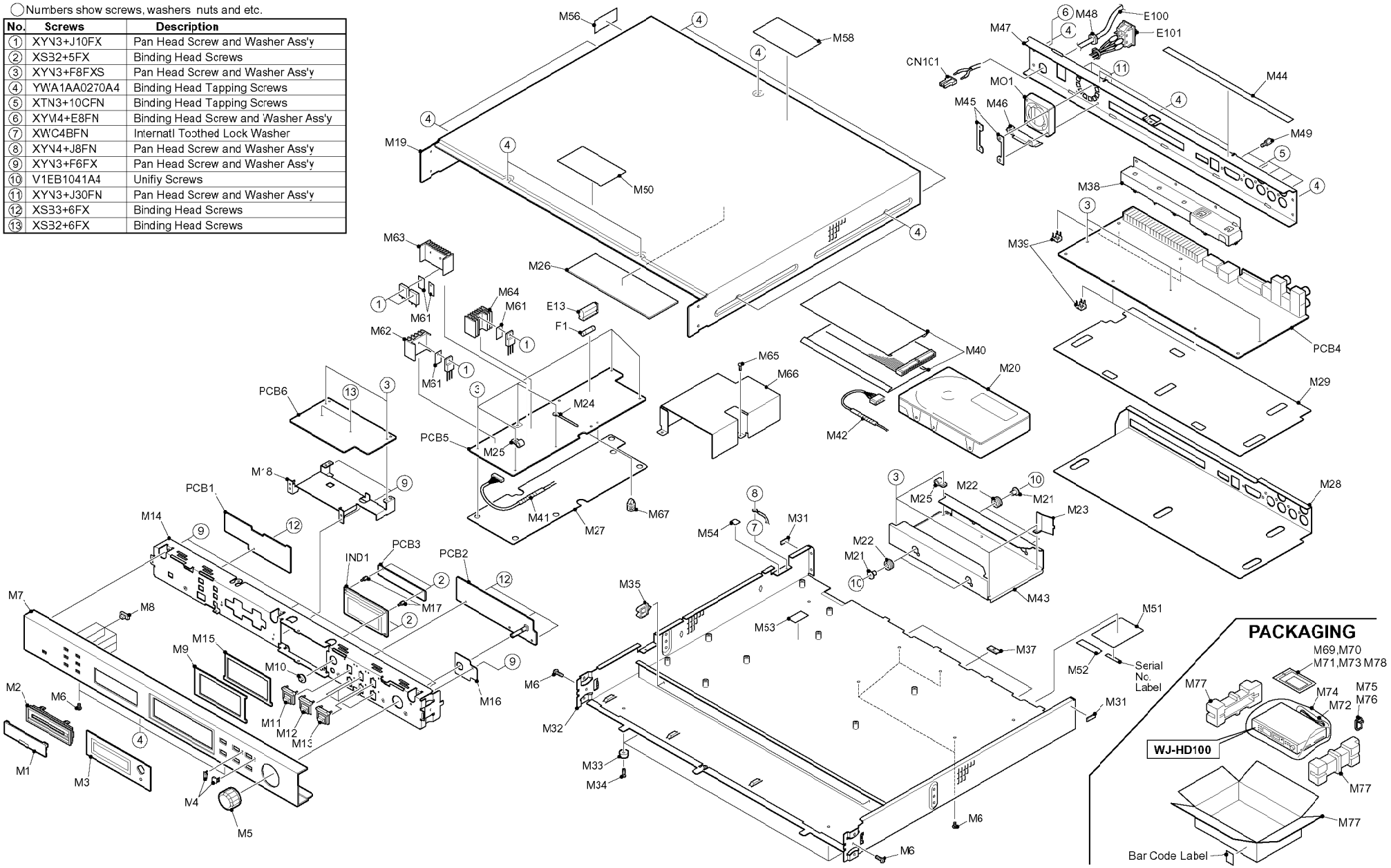

REPLACEMENT PARTS LIST

Important Notice

1. Components identified by " ⚠ " mark have special characteristics important for safety.
   When replacing any of these components, use only manufacturer's specified parts.
2. RTL : Retention Time Limited (No longer available after discontinuing product).

REF. NO.		PART NO.	DESCRIPTION
MISCELLANEOUS			
CN101	⚠	YWVAR2	Connector
F1	⚠	XBA2C31ET0A	Current Fuse 3.15A 250V
MO1		L6FAHDCH0004	Cooling Fan
BAT1		VL2330-1S54	Lithium Battery
E8		K1PZ30Z00001	Flat Cable for CF Memory Board CN1 and Main Board CN201
E9		K1PZ30Z00002	Flat Cable for CF Memory Board CN2 and Main Board CN202
E10		JHD100L01A	Wire Assy for Main Board CN302 and HDD
E11		JHD100L02A	Wire Assy for Main Board CN704 and HDD
E12		JHD100L09A	Wire Assy for CF Memory Board CN7 and Front-L Board CN51
E13		YW840522	Fuse Cover
E100	⚠	YWACF250G	AC Power Cord for WJ-HD100/G
		K2CC3ER00001	AC Power Cord for WJ-HD100/B
E101		JHD100JA01	Power Switch Assy
IND1		L5DBAGB00001	Liquid Crystal Display
M1	⚠	V6EA1047B3	Memory Card Slot Lid
M2	⚠	V5FA2467B3	Memory Card Slot Cover
M3	⚠	V5WB2632A3	LCD Panel
M4		V5DA1174B3	Switch Guard (x2)
M5	⚠	A5RC1038A3	Jog Dial Knob
M6		YWV1AA1074A4	Standard Screw (x8)
M7		V5WC2631A2	Front Panel
M8		YWV1VA0546A3	LED Lens (x6)
M9		V2FA1316A4	Cushion
M10		V6JA1185A3	Button
M11		YWV6JB1156A3	Button
M12		YWV6JA1156A3	Button
M13		V6JC1156A3	Button
M14		V2KA1343A1	Front Chassis
M15		V2PA1280A3	Insulator
M16		V2SA4928A4	Mounting Plate for VR
M17		V1EA1045A4	Special Screw (x2)
M18		V2SA4925A2	Mounting Angle for CF Memory Board
M19		V5ED2355A1	Upper Cover
M20		LD40A01101AM	HDD
M21		V2NA1135A4	Sleeve (x4)
M22		G4612590	Damper (x4)
M23		V2SA4989A4	Plate
M24		YWCS4	Cord Clamp
M25		EMT5N	Cord Clamp (x2)
M26		V2FA1348A3	Cushion
M27	⚠	V2PA1260A3	Insulator Sheet
M28		V2SA4983A2	Mounting Angle for Main Board
M29		V2PA1273A2	Insulator Sheet
M31		YWV2FE1201A4	Cushion (x2)
M32		V2KF1233A1	Main Chassis
M33		YWV5LA0067A4	Rubber Foot (x4)
M34		YWA2LA0070A4	Joint (x4)
M35		UAMS09V0	Cord Clamp (x2)
M36		YWV2FE1201A4	Cusion
M37		YWV4JA1017A4	Earth Spring (x3)
M40		V2FA1328A4	Cushion (x2)
M41		V2FB1313A4	Spiral Tube
M42		V2FC1313A4	Spiral Tube
M43		V2SA4924A2	Mounting Angle for HDD
M44		V2FB1293A4	Cushion (x2)
M45		YWV1FA0066A4	Nut Plate (x2)
M46		V2SA4938A4	Mounting Angle
M47		V5WC2629A2	Rear Panel
M48	⚠	YWSR5N4	Cord Clamp for WJ-HD100/G
		YWSR6W1	Cord Clamp for WJ-HD100/B
M49		JFS2.6SB1WM	Special Screw (x2)
M50		V7SA4324A4	Caution Label
M51	⚠	V7QA5611A4	Main Label for WJ-HD100/G
		V7QA5612A4	Main Label for WJ-HD100/B
M52		V7SA4171A4	PS-DATA Label
M53	⚠	YWV7MA0120A4	Fuse Change Label
M54	⚠	YWA7SA0689A4	Earth Mark Label
M56	⚠	YFV7MB0099A4	Caution Label
M58		V7SA4351A4	Setting Label

REF. NO.	PART NO.	DESCRIPTION	
FRONT-L BOARD			
PCB1 (RTL)	JH100EKB1A	Printed Circuit Board Assy	
Q51-55	B1ABCF000012	Transistor	
D51	YWSLR325DUT	LED	
D52	YWSLR325MGT	LED	
D53-55	YWSLR325DUT	LED	
D56	YWSLR325MGT	LED	
R51	ERJ3GEYJ391V	Metal	390 ohms 1/16W
R52	ERJ3GEYJ151V	Metal	150 ohms 1/16W
R53-55	ERJ3GEYJ391V	Metal	390 ohms 1/16W
R56	ERJ3GEYJ102V	Metal	1K ohms 1/16W
R57	ERJ3GEYJ152V	Metal	1.5K ohms 1/16W
R60-64	ERJ3GEYJ103V	Metal	10K ohms 1/16W
R65	ERJ3GEYJ391V	Metal	390 ohms 1/16W
C51	F1H1H103A190	Ceramic	0.01 µF
L51	ELJPA100KF	Coil	10 µH
SW51	K0H1BA000363	Tact Switch	
CN51	K1KA10A00072	10-pin Connector	
E1	YWMEP1866	Terminal	
FRONT-R BOARD			
PCB2 (RTL)	JH100JKC1A	Printed Circuit Board Assy	
IC1	C0JBAF000380	IC	
Q1-5	B1ABCF000012	Transistor	
D1	LN1361CTR	LED	
D2	LN1461C3UTR	LED	
D3	LN1361CTR	LED	
D4,5	LN1361CTR	LED	
R1-3	ERJ3GEYJ152V	Metal	1.5K ohms 1/16W
R4-6	ERJ3GEYJ100V	Metal	10 ohms 1/16W
R7-12	ERJ3GEYJ102V	Metal	1K ohms 1/16W
R14,15	ERJ3GEYJ151V	Metal	150 ohms 1/16W
R16,17	ERJ3GEYJ103V	Metal	10K ohms 1/16W
R18,19	ERJ3GEYJ152V	Metal	1.5K ohms 1/16W
R20-22	ERJ3GEYJ151V	Metal	150 ohms 1/16W
R23-25	ERJ3GEYJ103V	Metal	10K ohms 1/16W
R26-30	ERJ3GEYJ102V	Metal	1K ohms 1/16W
R31	ERJ3GEYJ152V	Metal	1.5K ohms 1/16W
R32	ERJ14YJ102	Metal	1K ohms 1/4W
VR2	D3CA52010007	Semi Fixed Resistor	
Z1,2	D1H815240001	Block Resistor	
C4	MCUV1E104ZFV	Ceramic	0.1 µF
C6-16	F1H1H103A190	Ceramic	0.01 µF
L2	ELJPA100KF	Coil	10 µH
SW1-6	EVQ11A05R	Push Switch	
SW7	K0H1EA000001	Tact Switch	
SW8	EVQB5R11120B	Particular Switch	
CN1	JHD100L07A	Wire Assy for CF Memory Board CN5	
CN2	JHD100L06A	Wire Assy for CF Memory Board CN6	
CN3	JHD100L08A	Wire Assy for CF Memory Board CN10	
E1,2	YWMEP1866	Terminal	

REF. NO.	PART NO.	DESCRIPTION
LCD BOARD		
PCB3 (RTL)	JH100JKD1A	Printed Circuit Board Assy
CN1	K1KB16A00070	16-pin Connector
CN2	JHD100L12A	Wire Assy for CF Memory Board CN9
CN3	JHD100L13A	Wire Assy for CF Memory Board CN4
MAIN BOARD		
PCB4 (RTL)	JH100EKZ1A	Printed Circuit Board Assy
IC1	C1ZBZ0001625	IC
IC2	C1ZBZ0001624	IC
IC3	C0EBZ0000008	IC
IC4	C2HBCY000004	IC
IC5	C0JBBZ000229	IC
IC6,7	C3ABPG000008	IC
IC8	C1BB00000504	IC
IC9	C0JBAZ000529	IC
IC10-13	C0JBBZ000228	IC
IC14	C1BB00000523	IC
IC15	C0JBAB000008	IC
IC16	YWTC7SH32FUL	IC
IC101	C1AB00000179	IC
IC102	C1AB00000157	IC
IC103	C1AB00001145	IC
IC107	C1AB00001146	IC
IC108	C0JBAB000175	IC
IC109	C1AB00000179	IC
IC110	C1AB00000157	IC
IC111	C1AB00001145	IC
IC112	YWNJM2267VT1	IC
IC113,114	C0ZBZ0000394	IC
IC115	C1AB00001281	IC
IC118	C0JBAG000046	IC
IC120	YWTC7WH04FUL	IC
IC121	C0JBAM000052	IC
IC201	C0JBAZ000842	IC
IC202,203	C0JBAZ000852	IC
IC204	C1AB00001296	IC
IC205,206	C3ABMG000086	IC
IC207	C0JBAA000102	IC
IC208	YWTC7SH02FUL	IC
IC212	C3FBMD000058	IC
IC213	C0JBAA000102	IC

REF. NO.	PART NO.	DESCRIPTION
IC215	C1ZBZ0001739	IC
IC216	C3BBHG000039	IC
IC217	C0JBAB000175	IC
IC301	C1ZBZ0001623	IC
IC302	YWTL16550CPT	IC
IC307,308	C0JBAZ001501	IC
IC309	TC74ACT541FT	IC
IC313,314	SN75ALS181NS	IC
IC315	C0JBAM000052	IC
IC316	C0JBAZ000279	IC
IC317	YWTC7S08FUL	IC
IC318	C0JBAZ001437	IC
IC319	C1DB00000246	IC
IC401-403	C0JBAF000389	IC
IC405	C0JBAF000389	IC
IC406	C0JBAB000008	IC
IC414	YWTC7S04FUL	IC
IC701,702	C0DBZZZ00045	IC
IC703	YWBA17810FP	IC
IC704	YWNJM2901VT1	IC
IC706	YWTC7W04FUL	IC
IC707	YWTC7W14FUL	IC
IC708	YWBA033FPE2	IC
IC709	YWBA17805FP	IC
IC710	C0DBEME00001	IC
Q1	B1ABCF000021	Transistor
Q101	B1ABCF000012	Transistor
Q104	B1ADCF000039	Transistor
Q105	B1ABCF000012	Transistor
Q106-110	B1ADCF000039	Transistor
Q202	2SD1898T01QR	Transistor
Q401-405	B1ABCF000012	Transistor
Q413	B1ABCF000012	Transistor
Q501-512	B1ABCF000012	Transistor
Q513-520	B1ABGD000007	Transistor
Q525,526	B1ABCF000012	Transistor
Q527	B1ABGD000007	Transistor
Q528	B1ABCF000012	Transistor
Q529	B1ABGD000007	Transistor
Q530	B1ABCF000012	Transistor
Q531	B1ABGD000007	Transistor
Q701,702	B1DFEC000003	FET
Q703	B1ABCF000021	Transistor
Q704	B1ADCF000039	Transistor
Q705	B1ADMD000002	Transistor
Q706	B1ABCF000021	Transistor
D1-3	DA204K-T46	Diode
D102	DA204K-T46	Diode
D201,202	B0JDAC000001	Diode
D301-304	MAZ80560ML	Diode
D401-405	LN1261CTR	LED
D413-417	DA204K-T46	Diode
D552	B0ACCJ000016	Diode
D567-575	B0ADCJ000007	Diode
D701	B0JCPE000004	Diode

REF. NO.	PART NO.	DESCRIPTION	
TH702	D4CC11530002	Thermistor	
VS301-304	ERZCF2MK560	ZNR	
R2,3	ERJ3GEYJ103V	Metal	10K ohms 1/16W
R5	ERJ3GEYJ220V	Metal	22 ohms 1/16W
R7,8	ERJ3GEYJ103V	Metal	10K ohms 1/16W
R11	ERJ3GEYJ111V	Metal	110 ohms 1/16W
R13	ERJ3GEYJ102V	Metal	1K ohms 1/16W
R14	ERJ3GEYJ103V	Metal	10K ohms 1/16W
R15	ERJ3EKF2403V	Metal	240K ohms 1/16W
R16	ERJ3EKF7503V	Metal	750K ohms 1/16W
R17	ERJ3GEYJ103V	Metal	10K ohms 1/16W
R18,19	ERJ3GEYJ472V	Metal	4.7K ohms 1/16W
R21	ERJ3EKF10R0V	Metal	10 ohms 1/16W
R22	ERJ3GEYJ121V	Metal	120 ohms 1/16W
R23	ERJ3GEYJ102V	Metal	1K ohms 1/16W
R24-35	ERJ3GEYJ220V	Metal	22 ohms 1/16W
R36	ERJ3GEYJ103V	Metal	10K ohms 1/16W
R38	ERJ3GEYJ106V	Metal	10M ohms 1/16W
R39	ERJ3GEYJ332V	Metal	3.3K ohms 1/16W
R40	ERJ3GEYJ472V	Metal	4.7K ohms 1/16W
R41	ERJ3GEYJ102V	Metal	1K ohms 1/16W
R42,43	ERJ3GEYJ104V	Metal	100K ohms 1/16W
R44	ERJ3GEYJ103V	Metal	10K ohms 1/16W
R45	ERJ3GEYJ104V	Metal	100K ohms 1/16W
R46	ERJ3GEYJ621V	Metal	620 ohms 1/16W
R47,48	ERJ3GEYJ103V	Metal	10K ohms 1/16W
R49	ERJ3GEYJ330V	Metal	33 ohms 1/16W
R51	ERJ3GEY0R00V	Metal	0 ohm 1/16W
R52	ERJ3GEYJ111V	Metal	110 ohms 1/16W
R53-57	ERJ3GEYJ220V	Metal	22 ohms 1/16W
R58,59	ERJ3GEY0R00V	Metal	0 ohm 1/16W
R60-67	ERJ14Y0R00H	Metal	0 ohm 1/4W
R69	ERJ3GEY0R00V	Metal	0 ohm 1/16W
R72	ERJ3GEY0R00V	Metal	0 ohm 1/16W
R73	ERJ3GEYJ103V	Metal	10K ohms 1/16W
R77,78	ERJ3GEYJ472V	Metal	4.7K ohms 1/16W
R81	ERJ3GEYJ104V	Metal	100K ohms 1/16W
R82	ERJ3GEYJ101V	Metal	100 ohms 1/16W
R83	ERDS2EJ103	Carbon	10K ohms 1/4W
R97	ERJ3GEYJ102V	Metal	1K ohms 1/16W
R101	ERJ3GEYJ512V	Metal	5.1K ohms 1/16W
R102	ERJ3GEYJ750V	Metal	75 ohms 1/16W
R104	ERJ3GEYJ512V	Metal	5.1K ohms 1/16W
R105	ERJ3GEYJ202V	Metal	2K ohms 1/16W
R109	ERJ3GEYJ681V	Metal	680 ohms 1/16W
R110	ERJ3GEYJ684V	Metal	680K ohms 1/16W
R113	ERJ3GEY0R00V	Metal	0 ohm 1/16W
R116	ERJ3GEYJ103V	Metal	10K ohms 1/16W
R118	YWR0816P222D	Carbon	2.2K ohms 1/16W
R119	ERJ3EKF1000V	Metal	100 ohms 1/16W
R121	ERJ3GEYJ103V	Metal	10K ohms 1/16W
R122	YWR0816P222D	Carbon	2.2K ohms 1/16W
R123	ERJ3GEY0R00V	Metal	0 ohm 1/16W
R124	YWR0816P561D	Carbon	560 ohms 1/16W
R125-127	ERJ3GEY0R00V	Metal	0 ohm 1/16W

REF. NO.	PART NO.	DESCRIPTION	
R128,129	ERJ3GEYJ202V	Metal	2K ohms 1/16W
R130	ERJ3GEY0R00	Metal	0 ohm 1/16W
R134	ERJ3GEYJ103V	Metal	10K ohms 1/16W
R135	ERJ3GEYJ104V	Metal	100K ohms 1/16W
R136	ERJ3GEYJ181V	Metal	180 ohms 1/16W
R137	ERJ3GEYJ684V	Metal	680K ohms 1/16W
R140	ERJ3GEYJ202V	Metal	2K ohms 1/16W
R141	ERJ3GEYJ102V	Metal	1K ohms 1/16W
R142	ERJ3GEYJ392V	Metal	3.9K ohms 1/16W
R143	YWR0816P431D	Metal	430 ohms 1/16W
R144	YWR0816P561D	Metal	560 ohms 1/16W
R145	ERJ3GEYJ102V	Metal	1K ohms 1/16W
R146	ERJ3GEY0R00	Metal	0 ohm 1/16W
R147	ERJ3GEYJ202V	Metal	2K ohms 1/16W
R150	ERJ3GEY0R00	Metal	0 ohm 1/16W
R153	ERJ3GEYJ103V	Metal	10K ohms 1/16W
R155	YWR0816P222D	Metal	2.2K ohms 1/16W
R156	ERJ3EKF1000V	Metal	100 ohms 1/16W
R159	YWR0816P222D	Metal	2.2K ohms 1/16W
R160	ERJ3EKF1000V	Metal	100 ohms /16W
R161	YWR0816P561D	Metal	560 ohms 1/16W
R162	ERJ3GEY0R00	Metal	0 ohm 1/16W
R163	ERJ3GEYJ750V	Metal	75 ohms 1/16W
R167	ERJ3GEYJ202V	Metal	2K ohms 1/16W
R168	ERJ3GEYJ102V	Metal	1K ohms 1/16W
R169	ERJ3GEYJ392V	Metal	3.9K ohms 1/16
R170	YWR0816P151D	Metal	150 ohms 1/16W
R171	ERJ3GEYJ102V	Metal	1K ohms 1/16W
R172	ERJ3GEY0R00	Metal	0 ohm 1/16W
R173	YWR0816P241D	Metal	240 ohms 1/16W
R174	ERJ3GEYJ103V	Metal	10K ohms 1/16W
R178,179	ERJ3GEY0R00	Metal	0 ohm 1/16W
R180	ERJ3GEYJ105V	Metal	1M ohms 1/16W
R182,184	ERJ3GEYJ103V	Metal	10K ohms 1/16W
R185	ERJ3GEYJ103V	Metal	10K ohms 1/16W
R187-189	ERJ3GEY0R00	Metal	0 ohm 1/16W
R191	ERJ3EKF18R0V	Metal	18 ohms 1/16W
R192	ERJ3GEYJ202V	Metal	2K ohms 1/16W
R193	ERJ3GEYJ103V	Metal	10K ohms 1/16W
R194,199	ERJ3GEY0R00	Metal	0 ohm 1/16W
R200	ERJ3GEYJ912V	Metal	9.1K ohms 1/16W
R201	ERJ3GEYJ512V	Metal	5.1K ohms 1/16W
R202	ERJ3GEYJ361V	Metal	360 ohms 1/16W
R203	ERJ3GEYJ912V	Metal	9.1K ohms 1/16W
R204	ERJ3GEYJ512V	Metal	5.1K ohms 1/16W
R205	ERJ3GEYJ361V	Metal	360 ohms 1/16W
R206,207	ERJ3GEY0R00	Metal	0 ohm 1/16W
R208	ERJ3GEYJ472V	Metal	4.7K ohms 1/16W
R209	ERJ3GEYJ102V	Metal	1K ohms 1/16W
R210	ERJ3EKF1601V	Metal	1.6K ohms 1/16W
R211	ERJ3EKF5100V	Metal	510 ohms 1/16W
R212	ERJ3GEY0R00	Metal	0 ohm 1/16W
R214	ERJ3GEYJ220V	Metal	22 ohms 1/16W
R220	ERJ3GEYJ222V	Metal	2.2K ohms 1/16W
R221	ERJ3GEYJ912V	Metal	9.1K ohms 1/16W

REF. NO.	PART NO.	DESCRIPTION	
R222	ERJ3GEYJ221V	Metal	220 ohms 1/16W
R223	ERJ3GEYJ332V	Metal	3.3K ohms 1/16W
R224,225	ERJ3GEYJ103V	Metal	10K ohms 1/16W
R226	ERJ3GEYJ391V	Metal	390 ohms 1/16W
R227	ERJ3GEYJ202V	Metal	2K ohms 1/16W
R228,229	ERJ3GEYJ103V	Metal	10K ohms 1/16W
R231	ERJ3GEYJ621V	Metal	620 ohms 1/16W
R232	ERJ3GEY0R00	Metal	0 ohm 1/16W
R233	ERJ3EKF20R0V	Metal	20 ohms 1/16W
R234,235	ERJ3GEYJ103V	Metal	10K ohms 1/16W
R237	ERJ3GEYJ103V	Metal	10K ohms 1/16W
R238	ERJ3GEY0R00	Metal	0 ohm 1/16W
R242-244	ERJ3GEY0R00	Metal	0 ohm 1/16W
R245	ERJ3GEYJ100V	Metal	10 ohms 1/16W
R247	ERJ3GEY0R00	Metal	0 ohm 1/16W
R249	ERJ3GEYJ103V	Metal	10K ohms 1/16W
R301	ERJ3GEYJ510V	Metal	51 ohms 1/16W
R317	ERJ3GEYJ303V	Metal	30K ohms 1/16W
R319	ERJ3GEYJ154V	Metal	150K ohms 1/16W
R321-323	ERJ3GEYJ153V	Metal	15K ohms 1/16W
R324,325	ERJ3GEYJ363V	Metal	36K ohms 1/16W
R326,327	ERJ3GEYJ222V	Metal	2.2K ohms 1/16W
R328,329	ERJ3GEYJ153V	Metal	15K ohms 1/16W
R331,332	ERJ3GEYJ153V	Metal	15K ohms 1/16W
R333,334	ERJ3GEYJ682V	Metal	6.8K ohms 1/16W
R335	ERJ3GEY0R00	Metal	0 ohm 1/16W
R336	ERJ3GEYJ153V	Metal	15K ohms 1/16W
R337	ERJ3GEYJ103V	Metal	10K ohms 1/16W
R338	ERJ12YJ151H	Metal	150 ohms 1/2W
R339	ERJ3GEY0R00	Metal	0 ohm 1/16W
R402,404	ERJ3GEYJ103V	Metal	10K ohms 1/16W
R406,407	ERJ3GEYJ103V	Metal	10K ohms 1/16W
R408	ERJ3GEYJ121V	Metal	120 ohms 1/16W
R409,410	ERJ3GEYJ202V	Metal	2K ohms 1/16W
R411,416	ERJ3GEYJ121V	Metal	120 ohms 1/16W
R417-422	ERJ3GEYJ103V	Metal	10K ohms 1/16W
R423,425	ERJ3GEY0R00	Metal	0 ohm 1/16W
R427	ERJ3GEY0R00	Metal	0 ohm 1/16W
R428	ERJ3GEYJ103V	Metal	10K ohms 1/16W
R429	ERJ3GEY0R00	Metal	0 ohm 1/16W
R430,431	ERJ3GEYJ103V	Metal	10K ohms 1/16W
R432	ERJ3GEY0R00	Metal	0 ohm 1/16W
R433	ERJ3GEYJ103V	Metal	10K ohms 1/16W
R434	ERJ3GEY0R00	Metal	0 ohm 1/16W
R435	ERJ3GEYJ103V	Metal	10K ohms 1/16W
R436	ERJ3GEY0R00	Metal	0 ohm 1/16W
R437	ERJ3GEYJ103V	Metal	10K ohms 1/16W
R438	ERJ3GEY0R00	Metal	0 ohm 1/16W
R439	ERJ3GEYJ103V	Metal	10K ohms 1/16W
R440	ERJ3GEYJ332V	Metal	3.3K ohms 1/16W
R442-444	ERJ3GEYJ103V	Metal	10K ohms 1/16W
R446	ERJ3GEY0R00	Metal	0 ohm 1/16W
R447	ERJ3GEYJ103V	Metal	10K ohms 1/16W
R448	ERJ3GEYJ391V	Metal	390 ohms 1/16W
R449	ERJ3GEY0R00	Metal	0 ohm 1/16W

REF. NO.	PART NO.	DESCRIPTION	
R501	ERJ3GEYJ101V	Metal	100 ohms 1/16W
R502	ERJ3GEYJ103V	Metal	10K ohms 1/16W
R503,504	ERJ3GEYJ472V	Metal	4.7K ohms 1/16W
R505	ERJ3GEYJ101V	Metal	100 ohms 1/16W
R506	ERJ3GEYJ103V	Metal	10K ohms 1/16W
R507,508	ERJ3GEYJ472V	Metal	4.7K ohms 1/16W
R509	ERJ3GEYJ101V	Metal	100 ohms 1/16W
R510	ERJ3GEYJ103V	Metal	10K ohms 1/16W
R511,512	ERJ3GEYJ472V	Metal	4.7K ohms 1/16W
R513	ERJ3GEYJ101V	Metal	100 ohms 1/16W
R514	ERJ3GEYJ103V	Metal	10K ohms 1/16W
R515,516	ERJ3GEYJ472V	Metal	4.7K ohms 1/16W
R517	ERJ3GEYJ101V	Metal	100 ohms 1/16W
R518	ERJ3GEYJ103V	Metal	10K ohms 1/16W
R519,520	ERJ3GEYJ472V	Metal	4.7K ohms 1/16W
R521	ERJ3GEYJ101V	Metal	100 ohms 1/16W
R522	ERJ3GEYJ103V	Metal	10K ohms 1/16W
R523,524	ERJ3GEYJ472V	Metal	4.7K ohms 1/16W
R525	ERJ3GEYJ101V	Metal	100 ohms 1/16W
R526	ERJ3GEYJ103V	Metal	10K ohms 1/16W
R527,528	ERJ3GEYJ472V	Metal	4.7K ohms 1/16W
R529	ERJ3GEYJ101V	Metal	100 ohms 1/16W
R530	ERJ3GEYJ103V	Metal	10K ohms 1/16W
R531,532	ERJ3GEYJ472V	Metal	4.7K ohms 1/16W
R533	ERJ3GEYJ101V	Metal	100 ohms 1/16W
R534	ERJ3GEYJ103V	Metal	10K ohms 1/16W
R535,536	ERJ3GEYJ472V	Metal	4.7K ohms 1/16W
R537	ERJ3GEYJ101V	Metal	100 ohms 1/16W
R538	ERJ3GEYJ103V	Metal	10K ohms 1/16W
R539,540	ERJ3GEYJ472V	Metal	4.7K ohms 1/16W
R541	ERJ3GEYJ101V	Metal	100 ohms 1/16W
R542	ERJ3GEYJ103V	Metal	10K ohms 1/16W
R543,544	ERJ3GEYJ472V	Metal	4.7K ohms 1/16W
R545	ERJ3GEYJ101V	Metal	100 ohms 1/16W
R546	ERJ3GEYJ103V	Metal	10K ohms 1/16W
R547,548	ERJ3GEYJ472V	Metal	4.7K ohms 1/16W
R550	ERJ3GEYJ332V	Metal	3.3K ohms 1/16W
R551	ERJ3GEYJ472V	Metal	4.7K ohms 1/16W
R553	ERJ3GEYJ332V	Metal	3.3K ohms 1/16W
R554	ERJ3GEYJ472V	Metal	4.7K ohms 1/16W
R556	ERJ3GEYJ332V	Metal	3.3K ohms 1/16W
R557	ERJ3GEYJ472V	Metal	4.7K ohms 1/16W
R559	ERJ3GEYJ332V	Metal	3.3K ohms 1/16W
R560	ERJ3GEYJ472V	Metal	4.7K ohms 1/16W
R562	ERJ3GEYJ332V	Metal	3.3K ohms 1/16W
R563	ERJ3GEYJ472V	Metal	4.7K ohms 1/16W
R565	ERJ3GEYJ332V	Metal	3.3K ohms 1/16W
R566	ERJ3GEYJ472V	Metal	4.7K ohms 1/16W
R568	ERJ3GEYJ332V	Metal	3.3K ohms 1/16W
R569	ERJ3GEYJ472V	Metal	4.7K ohms 1/16W
R571	ERJ3GEYJ332V	Metal	3.3K ohms 1/16W
R572	ERJ3GEYJ472V	Metal	4.7K ohms 1/16W
R587	ERJ3GEYJ101V	Metal	100 ohms 1/16W
R588	ERJ3GEYJ103V	Metal	10K ohms 1/16W
R589,590	ERJ3GEYJ472V	Metal	4.7K ohms 1/16W

REF. NO.	PART NO.	DESCRIPTION	
R591	ERJ3GEYJ101V	Metal	100 ohms 1/16W
R592	ERJ3GEYJ103V	Metal	10K ohms 1/16W
R593,594	ERJ3GEYJ472V	Metal	4.7K ohms 1/16W
R596	ERJ3GEYJ332V	Metal	3.3K ohms 1/16W
R597-599	ERJ3GEYJ472V	Metal	4.7K ohms 1/16W
R701	ERJ3GEYJ100V	Metal	10 ohms 1/16W
R702	ERJ3EKF7500V	Metal	750 ohms 1/16W
R703	ERJ3EKF1001V	Metal	1K ohms 1/16W
R704	ERJ3EKF51R0V	Metal	51 ohms 1/16W
R705	ERJ3EKF1001V	Metal	1K ohms 1/16W
R706	ERJ3GEYJ3R3V	Metal	3.3 ohms 1/16W
R707	ERJ3GEYJ2R2V	Metal	2.2 ohms 1/16W
R709	ERJ3GEYJ100V	Metal	10 ohms 1/16W
R710	ERJ3EKF1001V	Metal	1K ohms 1/16W
R711	ERJ3EKF7500V	Metal	750 ohms 1/16W
R712	ERJ3EKF51R0V	Metal	51 ohms 1/16W
R713	ERJ3EKF2002V	Metal	20K ohms 1/16W
R714	ERJ3GEYJ3R3V	Metal	3.3 ohms 1/16W
R715	ERJ3GEYJ2R2V	Metal	2.2 ohms 1/16W
R716	ERJ3EKF1000V	Metal	100 ohms 1/16W
R717	ERJ3GEY0R00	Metal	0 ohm 1/16W
R718	ERJ3GEYJ622V	Metal	6.2K ohms 1/16W
R719	ERJ3GEYJ752V	Metal	7.5K ohms 1/16W
R720,721	ERJ3GEYJ104V	Metal	100K ohms 1/16W
R722	ERJ3GEYJ203V	Metal	20K ohms 1/16W
R723	ERJ3GEYJ822V	Metal	8.2K ohms 1/16W
R724	ERJ3GEYJ303V	Metal	30K ohms 1/16W
R725	ERJ3GEYJ474V	Metal	470K ohms 1/16W
R726	ERJ3GEYJ225V	Metal	2.2M ohms 1/16W
R727,728	ERJ3GEYJ472V	Metal	4.7K ohms 1/16W
R729,730	ERJ3GEYJ224V	Metal	220K ohms 1/16W
R731	ERJ3GEYJ512V	Metal	5.1K ohms 1/16W
R732	ERJ3GEYJ101V	Metal	100 ohms 1/16W
R734	ERJ3GEYJ512V	Metal	5.1K ohms 1/16W
R735	ERJ3GEYJ361V	Metal	360 ohms 1/16W
R736	ERJ14YJ220H	Metal	22 ohms 1/4W
R737	ERJ3GEYJ273V	Metal	27K ohms 1/16W
R738	ERJ3GEYJ103V	Metal	10K ohms 1/16W
R739	ERJ3GEYJ104V	Metal	100K ohms 1/16W
R740,741	ERJ3GEY0R00	Metal	0 ohm 1/16W
R742	ERJ3GEYJ395V	Metal	3.9M ohms 1/16W
R743	ERJ3GEYJ105V	Metal	1M ohms 1/16W
R744	ERJ3GEYJ472V	Metal	4.7K ohms 1/16W
R745	ERJ3GEYJ224V	Metal	220K ohms 1/16W
R746	ERJ3GEYJ512V	Metal	5.1K ohms 1/16W
R747	ERJ3GEYJ101V	Metal	100 ohms 1/16W
R749	ERJ14Y0R00H	Metal	0 ohm 1/4W
R751	ERJ1WY0R00H	Metal	0 ohm 1W
R755	ERJ3EKF2002V	Metal	20K ohms 1/16W
R756,757	ERJ3GEYJ102V	Metal	1K ohms 1/16W
R760,761	ERJ12Y0R00H	Carbon	0 ohm 1/2W
R762	ERJ3GEYJ101V	Metal	100 ohms 1/16W
R805	ERJ3GEYJ104V	Metal	100K ohms 1/16W
R806	ERJ3GEYJ101V	Metal	100 ohms 1/16W
R807	ERJ3GEYJ684V	Metal	680K ohms 1/16W

REF. NO.	PART NO.	DESCRIPTION	
R809,811	ERJ3GEY0R00	Metal	0 ohm 1/16W
R812,901	ERJ3GEY0R00	Metal	0 ohm 1/16W
R902-904	ERJ3GEYJ472V	Metal	4.7K ohms 1/16W
R905	ERJ3GEY0R00	Metal	0 ohm 1/16W
R906	ERJ14YJ221H	Metal	220 ohms 1/4W
VR201	EVM1XSX50B52	Variable Resistor	500 ohms
Z1-5	YWMNR14EJ103	Block Resistor	
Z7-10	YWMNR14EJ220	Block Resistor	
Z11-14	D1H833040002	Block Resistor	
Z27-30	D1H868040001	Block Resistor	
Z31-34	D1H833040002	Block Resistor	
Z35-39	YWMNR14EJ220	Block Resistor	
Z101-104	YWMNR14EJ220	Block Resistor	
Z201-211	YWMNR14EJ220	Block Resistor	
Z212,213	YWMNR14EJ103	Block Resistor	
Z214-240	YWMNR14EJ220	Block Resistor	
Z245-252	YWMNR14EJ220	Block Resistor	
Z301-308	YWMNR14EJ220	Block Resistor	
Z401,402	YWMNR14EJ103	Block Resistor	
Z403	YWMNR14EJ391	Block Resistor	
Z404	YWMNR14EJ103	Block Resistor	
C3,4	F1H1H103A190	Ceramic	0.01 µF
C5	MCUV1E104ZFV	Ceramic	0.1 µF
C6	F3F1C1060002	Tantalum	10 µF 16V
C7	MCUV1E104ZFV	Ceramic	0.1 µF
C8	F1H1A154A007	Ceramic	0.15 µF
C9	F1H1H332A190	Ceramic	3300 pF
C10	MCUV1E104ZFV	Ceramic	0.1 µF
C11	F3G1A3360001	Tantalum	33 µF 10V
C12-40	MCUV1E104ZFV	Ceramic	0.1 µF
C41	F3G1A3360001	Tantalum	33 µF 10V
C42-80	MCUV1E104ZFV	Ceramic	0.1 µF
C81	F3G1A3360001	Tantalum	33 µF 10V
C82-88	MCUV1E104ZFV	Ceramic	0.1 µF
C89	F3G1A3360001	Tantalum	33 µF 10V
C90,91	MCUV1E104ZFV	Ceramic	0.1 µF
C92,93	F1H1H330A231	Ceramic	33 pF
C94	F3F1C1060002	Tantalum	10 µF 16V
C95-99	MCUV1E104ZFV	Ceramic	0.1 µF
C101	F2H1A1010003	Electrolytic	100 µF 10V
C102	MVUV1C104KBV	Ceramic	0.1 µF
C103	F1H1H5110001	Ceramic	510 pF
C104	MCUV1E104ZFV	Ceramic	0.1 µF
C105	MVUV1C104KBV	Ceramic	0.1 µF
C106	F1L1A1060001	Ceramic	10 µF
C107	F1K1C105A023	Ceramic	1 µF
C108	F1H1H103A190	Ceramic	0.01 µF
C109	F3H1A1070006	Tantalum	100 µF 10V
C110	F1L1A1060001	Ceramic	10 µF
C111	F1H1H103A190	Ceramic	0.01 µF
C112	F3H1A1070006	Tantalum	100 µF 10V
C120,121	F1H1H330A231	Ceramic	33 pF
C122	MCUV1E104ZFV	Ceramic	0.1 µF
C123,124	F3F1C1060002	Tantalum	10 µF 16V
C125	MVUV1C104KBV	Ceramic	0.1 µF

REF. NO.	PART NO.	DESCRIPTION	
C126,127	MCUV1E104ZFV	Ceramic	0.1 µF
C128	F1H1H5110001	Ceramic	510 pF
C129	MVUV1C104KBV	Ceramic	0.1 µF
C132	MCUV1E104ZFV	Ceramic	0.1 µF
C134,135	F1L1A1060001	Ceramic	10 µF
C136	F1H1H103A190	Ceramic	0.01 µF
C137	F3H1A1070006	Tantalum	100 µF 10V
C138	F1L1A1060001	Ceramic	10 µF
C139	F1H1H103A190	Ceramic	0.01 µF
C140	F3H1A1070006	Tantalum	100 µF 10V
C141	F1K1C105A023	Ceramic	1 µF
C142	EEVHB0G221P	Electrolytic	220 µF 4V
C143	F2G1V2200001	Electrolytic	22 µF 35V
C144	F1H1H103A190	Ceramic	0.01 µF
C145	F3H1A1070006	Tantalum	100 µF 10V
C148	MCUV1E104ZFV	Ceramic	0.1 µF
C150	F3F1C1060002	Tantalum	10 µF 16V
C151	MCUV1E104ZFV	Ceramic	0.1 µF
C152	F1H1E224A004	Ceramic	0.22 µF
C153	F1H1C3340003	Ceramic	0.33 µF
C154,155	MCUV1E104ZFV	Ceramic	0.1 µF
C156	F3F1C1060002	Tantalum	10 µF 16V
C157	MVUV1C104KBV	Ceramic	0.1 µF
C158,159	F1H1H2200001	Ceramic	33 pF
C162	MCUV1E104ZFV	Ceramic	0.1 µF
C163-165	MVUV1C104KBV	Ceramic	0.1 µF
C167	MCUV1E104ZFV	Ceramic	0.1 µF
C168	F1H1A105A004	Ceramic	1 µF
C169	MCUV1E104ZFV	Ceramic	0.1 µF
C170	F1H1A105A004	Ceramic	1 µF
C171-175	MCUV1E104ZFV	Ceramic	0.1 µF
C201	F3F1C1060002	Tantalum	10 µF 16V
C202-214	MCUV1E104ZFV	Ceramic	0.1 µF
C215	F3G1A3360001	Tantalum	33 µF 10V
C216-219	MCUV1E104ZFV	Ceramic	0.1 µF
C220	F3G1A3360001	Tantalum	33 µF 10V
C221,222	MCUV1E104ZFV	Ceramic	0.1 µF
C223	F1L1A1060001	Ceramic	10 µF
C224	F1K1C105A023	Ceramic	1 µF
C225-231	MCUV1E104ZFV	Ceramic	0.1 µF
C232	F3G1A3360001	Tantalum	33 µF 10V
C233-238	MCUV1E104ZFV	Ceramic	0.1 µ
C239	F3G1A3360001	Tantalum	33 µF 10V
C240,241	MCUV1E104ZFV	Ceramic	0.1 µF
C245	MCUV1E104ZFV	Ceramic	0.1 µF
C246	F3F1C1060002	Tantalum	10 µF 16V
C247	MCUV1E104ZFV	Ceramic	0.1 µF
C251	F1H1H101A231	Ceramic	100 pF
C252	F3G1A3360001	Tantalum	33 µF 10V
C253-256	MCUV1E104ZFV	Ceramic	0.1 µF
C257	F3F1C1060002	Tantalum	10 µF 16V
C258	MCUV1E104ZFV	Ceramic	0.1 µF
C259	F3F1C1060002	Tantalum	10 µF 16V
C260,301	MCUV1E104ZFV	Ceramic	0.1 µF
C302	F3F1C1060002	Tantalum	10 µF 16V

REF. NO.	PART NO.	DESCRIPTION	
C303	MCUV1E104ZFV	Ceramic	0.1 µF
C304	F3F1C1060002	Tantalum	10 µF 16V
C305	MCUV1E104ZFV	Ceramic	0.1 µF
C306-309	MVUV1C104KBV	Ceramic	0.1 µF
C310-312	MCUV1E104ZFV	Ceramic	0.1 µF
C327	MVUV1C104KBV	Ceramic	0.1 µF
C328	F1H1H103A190	Ceramic	0.01 µF
C329	MVUV1C104KBV	Ceramic	0.1 µF
C330	F1H1H103A190	Ceramic	0.01 µF
C331-333	F1H1H101A231	Ceramic	100 pF
C334	F1H1A105A004	Ceramic	1 µF
C335	F3H1A1570001	Tantalum	150 µF 10V
C336	F1H1H103A190	Ceramic	0.01 µF
C337-339	MCUV1E104ZFV	Ceramic	0.1 µF
C342	MCUV1E104ZFV	Ceramic	0.1 µF
C343	F2G1H1R00001	Electrolytic	1 µF 50V
C344	F2G1HR100002	Electrolytic	0.1 µF 50V
C401	F3F1C1060002	Tantalum	10 µF 16V
C402-405	MCUV1E104ZFV	Ceramic	0.1 µF
C406	F3F1C1060002	Tantalum	10 µF 16V
C407-410	MCUV1E104ZFV	Ceramic	0.1 µF
C411	F3F1C1060002	Tantalum	10 µF 16V
C412-415	MCUV1E104ZFV	Ceramic	0.1 µF
C421	F3F1C1060002	Tantalum	10 µF 16V
C422-424	MCUV1E104ZFV	Ceramic	0.1 µF
C425	MVUV1C104KBV	Ceramic	0.1 µF
C426	MCUV1E104ZFV	Ceramic	0.1 µF
C428-434	MCUV1E104ZFV	Ceramic	0.1 µF
C501	F1H1H103A190	Ceramic	0.01 µF
C502	MVUV1C104KBV	Ceramic	0.1 µF
C503	F1H1H103A190	Ceramic	0.01 µF
C504	MVUV1C104KBV	Ceramic	0.1 µF
C505	F1H1H103A190	Ceramic	0.01 µF
C506	MVUV1C104KBV	Ceramic	0.1 µF
C507	F1H1H103A190	Ceramic	0.01 µF
C508	MVUV1C104KBV	Ceramic	0.1 µF
C509	F1H1H103A190	Ceramic	0.01 µF
C510	MVUV1C104KBV	Ceramic	0.1 µF
C511	F1H1H103A190	Ceramic	0.01 µF
C512	MVUV1C104KBV	Ceramic	0.1 µF
C513	F1H1H103A190	Ceramic	0.01 µF
C514	MVUV1C104KBV	Ceramic	0.1 µF
C515	F1H1H103A190	Ceramic	0.01 µF
C516	MVUV1C104KBV	Ceramic	0.1 µF
C517	F1H1H103A190	Ceramic	0.01 µF
C518	MVUV1C104KBV	Ceramic	0.1 µF
C519	F1H1H103A190	Ceramic	0.01 µF
C520	MVUV1C104KBV	Ceramic	0.1 µF
C521	F1H1H103A190	Ceramic	0.01 µF
C522	MVUV1C104KBV	Ceramic	0.1 µF
C523	F1H1H103A190	Ceramic	0.01 µF
C524	MVUV1C104KBV	Ceramic	0.1 µF
C525,527	F1H1H103A190	Ceramic	0.01 µF
C529,531	F1H1H103A190	Ceramic	0.01 µF
C533,535	F1H1H103A190	Ceramic	0.01 µF

REF. NO.	PART NO.	DESCRIPTION	
C537,539	F1H1H103A190	Ceramic	0.01 µF
C548	F1H1H103A190	Ceramic	0.01 µF
C549	MVUV1C104KBV	Ceramic	0.1 µF
C550	F1H1H103A190	Ceramic	0.01 µF
C551	MVUV1C104KBV	Ceramic	0.1 µF
C552	F1H1H103A190	Ceramic	0.01 µF
C554	MCUV1E104ZFV	Ceramic	0.1 µF
C555,556	MVUV1C104KBV	Ceramic	0.1 µF
C557-579	F1H1H103A190	Ceramic	0.01 µF
C662	F2G1E1010001	Electrolytic	100 µF 25V
C701	YWSK41C336MC	Tantalum	33 µF 16V
C702	YWRVJ1A221M	Electrolytic	220 µF 10V
C703	MCUV1E104ZFV	Ceramic	0.1 µF
C704	F1H1A105A004	Ceramic	1 µF
C705	MCUV1E104ZFV	Ceramic	0.1 µF
C706	F1H1H103A190	Ceramic	0.01 µF
C707	MCUV1E104ZFV	Ceramic	0.1 µF
C708	F1H1H101A231	Ceramic	100 pF
C709	MCUV1E104ZFV	Ceramic	0.1 µF
C710-712	F1H1A105A004	Ceramic	1 µF
C713	F1H1H102A022	Ceramic	1000 pF
C714,715	F3H1A1570001	Tantalum	150 µF 10V
C716	MCUV1E104ZFV	Ceramic	0.1 µF
C717	YWSK41C336MC	Tantalum	33 µF 16V
C718	YWRVJ1A221M	Electrolytic	220 µF 10V
C719,720	MCUV1E104ZFV	Ceramic	0.1 µF
C721	F1H1A105A004	Ceramic	1 µF
C722	YW5F474Z1VT	Ceramic	0.47 µF
C723	MCUV1E104ZFV	Ceramic	0.1 µF
C724	F1H1H102A022	Ceramic	1000 pF
C725	F1H1H472A022	Ceramic	4700 pF
C726-728	F1H1A105A004	Ceramic	1 µF
C729	F1H1H102A022	Ceramic	1000 pF
C730,731	F3H1A1570001	Tantalum	150 µF 10V
C732	MCUV1E104ZFV	Ceramic	0.1 µF
C733	F2G1E1010001	Electrolytic	100 µF 25V
C734	F1H1E224A004	Ceramic	0.22 µF
C735	MCUV1E104ZFV	Ceramic	0.1 µF
C736	F2G1C1000002	Electrolytic	10 µF 16V
C737	F1H1A105A004	Ceramic	1 µF
C738-740	MCUV1E104ZFV	Ceramic	0.1 µF
C741	F2G0J1010002	Electrolytic	100 µF 6.3V
C742	F2G1E1010001	Electrolytic	100 µF 25V
C743	F2G1E1000001	Electrolytic	10 µF 25V
C744	F1H1A105A004	Ceramic	1 µF
C745-748	MCUV1E104ZFV	Ceramic	0.1 µF
C749	F2G0J1010002	Electrolytic	100 µF 6.3V
C751	F2H1A1010003	Electrolytic	100 µF 10V
C752	MCUV1E104ZFV	Ceramic	0.1 µF
C753	F1H1H103A190	Ceramic	0.01 µF
C754	F3H1C4760008	Tantalum	47 µF 16V
C755	F1H1H103A190	Ceramic	0.01 µF
C756	F3H1A1570001	Tantalum	150 µF 10V
C757	F1H1H330A231	Ceramic	33 pF
C758	MCUV1E104ZFV	Ceramic	0.1 µF

REF. NO.	PART NO.	DESCRIPTION	
C759	F2G0J1010002	Electrolytic	100 µF 6.3V
C901	MCUV1E104ZFV	Ceramic	0.1 µF
C902	F3F1C1060002	Tantalum	10 µF 16V
C903	F1H1A105A004	Ceramic	1 µF
C904	MVUV1C104KBV	Ceramic	0.1 µF
C905	F1H1A105A004	Ceramic	1 µF
C906	F3F1C1060002	Tantalum	10 µF 16V
C907-910	MCUV1E104ZFV	Ceramic	0.1 µF
C911	F3F1C1060002	Tantalum	10 µF 16V
C912-915	MCUV1E104ZFV	Ceramic	0.1 µF
C916	F3F1C1060002	Tantalum	10 µF 16V
C917-920	MCUV1E104ZFV	Ceramic	0.1 µF
C921	F3F1C1060002	Tantalum	10 µF 16V
C922-928	MCUV1E104ZFV	Ceramic	0.1 µF
C929	F1H1H103A190	Ceramic	0.01 µF
C930	F1L1A1060001	Ceramic	10 µF
C931,932	MCUV1E104ZFV	Ceramic	0.1 µF
C933	MVUV1C104KBV	Ceramic	0.1 µF
L5	ELJPA100KF	Coil	10 µH
L8-10	ELJPA100KF	Coil	10 µH
L15,16	ELJPA100KF	Coil	10 µH
L17,18	J0JDC0000016	Coil	
L19,20	ELJPA100KF	Coil	10 µH
L101-103	ELJPA100KF	Coil	10 µH
L105	ELJPA100KF	Coil	10 µH
L106	ELJFC330JF	Coil	33 µH
L107-110	ELJPA100KF	Coil	10 µH
L111,112	ELJPA6R8MF	Coil	6.8 µH
L113,114	ELJPA100KF	Coil	10 µH
L201	ELJPA6R8MF	Coil	6.8 µH
L203-210	ELJPA100KF	Coil	10 µH
L212-215	ELJPA100KF	Coil	10 µH
L301-305	ELJPA100KF	Coil	10 µH
L308	ELJPA6R8MF	Coil	6.8 µH
L401-403	ELJPA100KF	Coil	10 µH
L405-408	ELJPA100KF	Coil	10 µH
L501-520	G1C100J00004	Coil	10 µH
L523,524	ELJPA100KF	Coil	10 µH
L526	ELJPA100KF	Coil	10 µH
L528-530	ELJPA100KF	Coil	10 µH
L531,532	G1C100J00004	Coil	10 µH
L533-540	ELJPA100KF	Coil	10 µH
L541	G1C100J00004	Coil	10 µH
L542-550	J0JCC0000036	Coil	
L701	ELJPA100KF	Coil	10 µH
L702,703	G1C4R0ZA0007	Coil	
L704	ELJPA6R8MF	Coil	6.8 µH
L705,706	G1C4R0ZA0007	Coil	
L707,708	ELJPA6R8MF	Coil	6.8 µH
L709	YWS100671470	Coil	
SW401	K0D144A00010	Dip Switch	
SW402	K0D166A00001	Slide Switch	
X1	H0J250500008	Crystal Oscillator	
X2	H0J409400004	Crystal Oscillator	
X101	H0J245500026	Crystal Oscillator	

REF. NO.	PART NO.	DESCRIPTION	
X201	H1A5405B0007	Crystal Oscillator	
X301	H0J327200043	Crystal Oscillator	
X303	H1A7374B0001	Crystal Oscillator	
CF1	J0HACC000026	LC Filter	
CF101	J0E6004B0002	LC Filter	
CF102	J0E4004B0002	LC Filter	
CF103	J0E6004B0002	LC Filter	
CF104	J0E4004B0002	LC Filter	
CF302-304	YWNFA41R222T	Ceramic Filter	
RL501	K6B2CDA00003	Relay	
CN2	K2HA101B0002	Connector	
CN101	K1QBB2CB0003	BNC Connector	
CN102	K1QBB1CB0003	BNC Connector	
CN201,202	YW528083090	30-pin Connector	
CN204,205	ILS3PS2T2EF	2-pin Connector	
CN301	YWJHEY9P1A3G	D-SUB Connector	
CN302	K1KA40A00001	40-pin Connector	
CN305	YWTM11R5C66	Connector	
CN701	YWB2BPHKS	2-pin Connector	
CN703	YWB10PVH	10-pin Connector	
CN704	YWB4P-VH	4-pin Connector	
CN705	YW53014-0210	2-pin Connector	
SF703,704	YWSSFC2AT4	Current Fuse	2A 125V
SF706	YWSSFC1AT4	Current Fuse	1A 125V
BZ401	L0DDEA000008	Buzzer	
JK1	K2HA204B0015	Jack	
E1-3	YWMEP1866	Terminal	
E501	K4BC25B00001	Terminal	
M38	V2SA4926A3	Mounting Angle	
M39	V2SA4929A3	Mounting Angle (x4)	

POWER BOARD

PCB5 (RTL)		JH100EKZ2A	Printed Circuit Board Assy
IC1		MIP0227SY	IC
IC2		YWTA76431S	IC
Q1,2	⚠	YWPC123FY2	Photocoupler
D1	⚠	YWD3SB60	Diode
D2		YWP6KE180A	Diode
D3		YWERB3710	Diode
D4		YWSC2012	Diode
D11		YWSF5LC20U	Diode
D12		YWSF10SC6	Diode
D13		B0JBRD000004	Diode
VS1	⚠	ERZV07D471	ZNR
R1		ERC12ZGM105	Solid 1M ohms 1/2W
R2,3		ERJ14YJ913	Metal 91K ohms 1/4W
R6		ERJ6GEYJ220V	Metal 22 ohms 1/10W

REF. NO.	PART NO.	DESCRIPTION	
R7,8	YF2116470JT	Metal	47 ohms 1/10W
R9	ERJ6GEYJ4R7V	Metal	4.7 ohms 1/10W
R10	ERG3SJ181P	Metal	180 ohms 1/16W
R11	ERJ14YJ150	Metal	15 ohms 1/4W
R12	YF2116470JT	Metal	47 ohms 1/10W
R13	ERJ6GEYJ332V	Metal	3.3K ohms 1/10W
R14	ERJ6GEYJ102V	Metal	1K ohms 1/10W
R15	YWR1220P682D	Metal	6.8K ohms 1/10W
R16	ERJ6GEYJ221V	Metal	220 ohms 1/10W
R17	YWR1220P682D	Metal	6.8K ohms 1/10W
R23	ERJ6GEYJ104V	Metal	100K ohms 1/10W
R24	ERG3SJ473P	Metal	47K ohms 3W
R25	ERG2SJ150P	Metal	15 ohms 2W
R30,31	ERJ6GEYJ101V	Metal	100 ohms 1/10W
C1 ⚠	ECQU2A563MT	Plastic	0.056 µF 100V
C2,3 ⚠	F1B2E1520002	Ceramic	1500 pF
C4 ⚠	ECQU2A563MT	Plastic	0.056 µF 100V
C5	ECQE6103KF	Plastic	0.01 µF 630V
C6,7	EC0S2GA121DB	Electrolytic	120 µF 400V
C8	RCUV1E104KBN	Ceramic	0.1 µF
C9	EEUEB1A101	Electrolytic	100 µF 10V
C10	F1J1C105A004	Ceramic	1 µF
C11 ⚠	F1B2E1520002	Ceramic	1500 pF
C13	ECKD3F101KBP	Ceramic	100 pF
C21	EEUFC1E102	Electrolytic	1000 µF 25V
C22	EEUFC1C331	Electrolytic	330 µF 16V
C23	ECKDHT681KB	Ceramic	680 pF
C24,25	EEUFC1A272	Electrolytic	2700 µF 10V
C26	RCUV1E104KBN	Ceramic	0.1 µF
C27	EEUFC1A471	Electrolytic	470 µF 10V
C28	EEUFC1A222	Electrolytic	2200 µF 10V
C29	EEUFC1A471	Electrolytic	470 µF 10V
C30	EEUFC1A272	Electrolytic	2700 µF 10V
C31	EEUFC1A222	Electrolytic	2200 µF 10V
C32	EEUFC1A272	Electrolytic	2700 µF 10V
C35	ECKDHT102KB	Ceramic	1000 pF
L1	YW0R5A183F20	LC Filter	
L2 ⚠	G0B273E00001	Coil	
L21-24	YWSL1011220	Coil	22 µH
T1 ⚠	G4D2A0000045	Power Transformer	
CN1 ⚠	YWB2P3VH	3-pin Connector	
CN3 ⚠	YWB4P7VH	7-pin Connector	
E2,3 ⚠	K3GE1BB00004	Fuse Holder	
E4,5	YWMEP1866	Terminal	
E6	JHD100L03A	Wire Assy for Main Board CN703	
E7	JHD100L04B	Wire Assy for Main Board CN705	
E8	YWMEP1866	Terminal	
M61	YWAC-256	Cooling Sheet (x4)	
M62	YWV7DA0045A4	Heat Sink	
M63	YWV7DA0277A4	Heat Sink	
M64	YWPC203525PB	Heat Sink	
M65	YWP4050	Tack	
M66 ⚠	V2PA1261A3	Insulator Cover	
M67	YW2J08	Support (x2)	

REF. NO.	PART NO.	DESCRIPTION	
CF MEMORY BOARD			
PCB6 (RTL)	JH100JKA2A	Printed Circuit Board Assy	
IC1	C0JBBH000004	IC	
IC2	C0JBBH000005	IC	
IC3	C0JBBF000040	IC	
IC4	C0DBEKG00001	IC	
R1,2	ERJ3GEYJ472V	Metal	4.7K ohms 1/16W
R3-5	ERJ3GEY0R00	Metal	0 ohm 1/16W
R6-19	ERJ3GEYJ103V	Metal	10K ohms 1/16W
R20	ERJ3GEYJ432V	Carbon	4.3K ohms 1/16W
R21	ERJ3GEYJ102V	Metal	1K ohms 1/16W
R22	ERJ3GEYJ222V	Metal	2.2K ohms 1/16W
R23,26	ERJ3GEY0R00	Metal	0 ohm 1/16W
C1	MCUV1E104ZFV	Ceramic	0.1 µF
C2	YWSK41C106MB	Tantalum	10 µF 16V
C3-6	MCUV1E104ZFV	Ceramic	0.1 µF
C7	YWSK41C106MB	Tantalum	10 µF 16V
C8-11	MCUV1E104ZFV	Ceramic	0.1 µF
C12	F3F1V334A004	Tantalum	0.33 µF 35V
C13	F3G1C2260001	Tantalum	22 µF 16V
L1-5	ELJPA100KF	Coil	10 µH
CN1,2	YW528083090	30-pin Connector	
CN4	K1KA11A00025	11-pin Connector	
CN5	YW533980990	9-pin Connector	
CN6,7	YW533981090	10-pin Connector	
CN8	K1NA50E00010	50-pin Connector	
CN9	K1KA05A00066	5-pin Connector	
CN10	YW533980790	7-pin Connector	
E1,2	YWMEP1866	Terminal	
ACCESSORY PARTS / PACKAGING PARTS			
M69	XSB3+10FN	Fixing Screw M3x10 (x6)	
M70 ⚠	V8QA5549AN	Operating Instructions	
M71	YWT050803	Polyethylene Bag	
M72	PE20X25C05B	Polyethylene Bag	
M73	PE26X40C05B	Polyethylene Bag	
M74	PE55X71C1B	Polyethylene Bag	
M75	YWA2SA1756A3	Rack Mounting Bracket (x2)	
M76	PE20X35C05B	Polyethylene Bag	
M77	V9CA4269AN	Packaging Assy	
M78	V8RA1264AN	Printed Matters	

Printed in Japan
C-806 Ⓝ 5, 7, 23